Introduction

Bill Nelson, P.E.
GLHN Architects & Engineers
Ron Schneider
Trane Commercial Systems

- Variable Flow, Chilled Water
- Solving Existing Building Problems
- Case Study - University of Arizona
- Q & A

Purpose of Today's Presentation

- Learn How To Optimize Chiller Plants to Achieve Remarkable Energy Saving and Capacity increases
- Learn Some"New Thinking" & Case Studies
- Provide Handout Material - Useful Sizing Guides

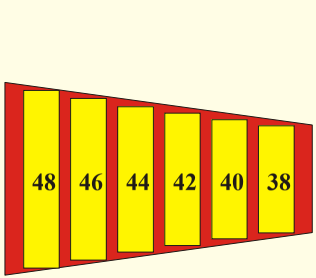

Supply Temp

$$Q = \dot{m}\,\Delta T$$

Temperature Differential

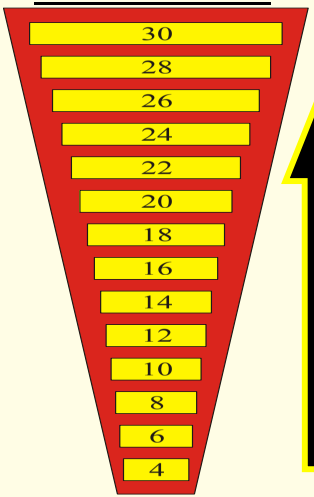

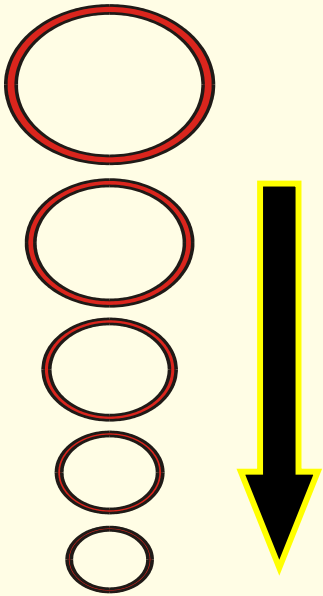

Flow Rates

Component Size

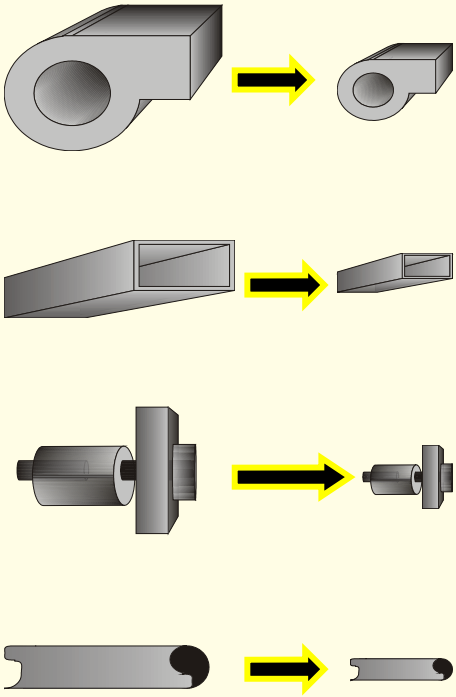

=Lower Energy Cost??

Variable Flow, Chilled Water

Variable Flow in Chilled Water Systems

Primary / Secondary

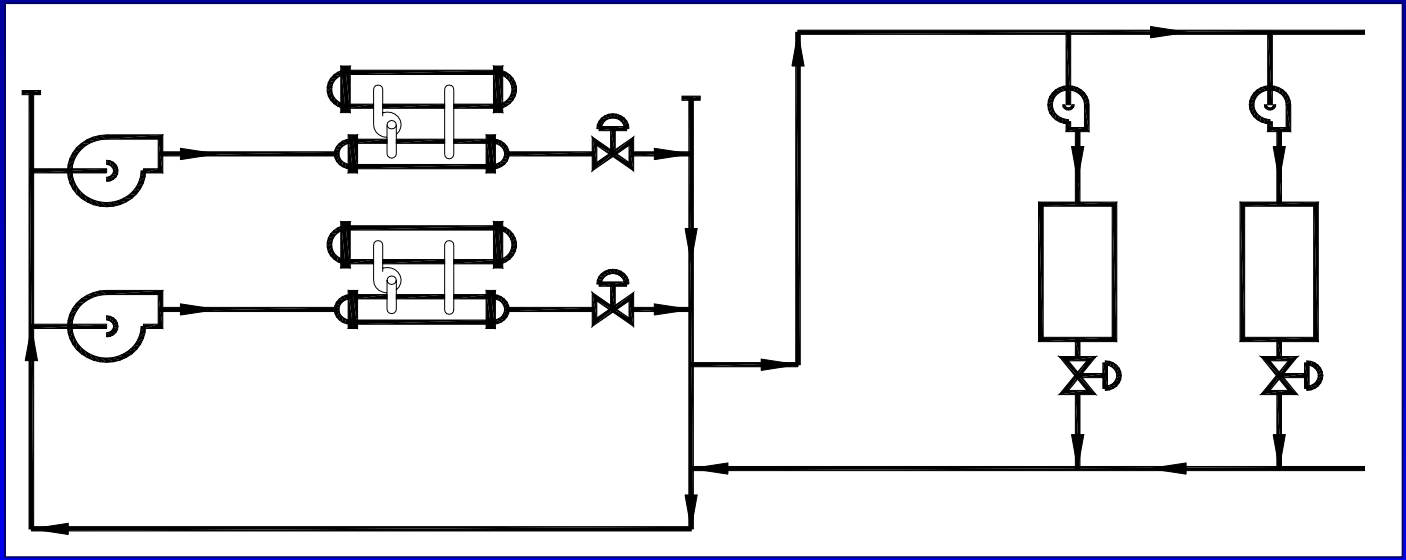

Variable Flow in Chilled Water Systems

Primary / Secondary / Tertiary

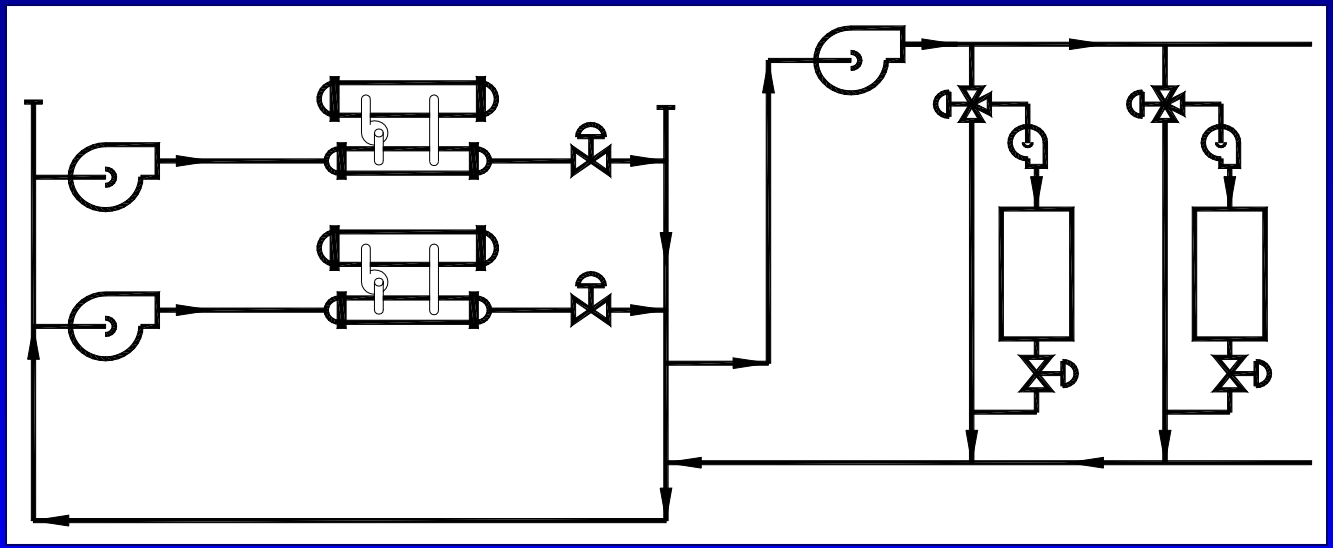

Variable Flow in Chilled Water Systems

Direct Primary

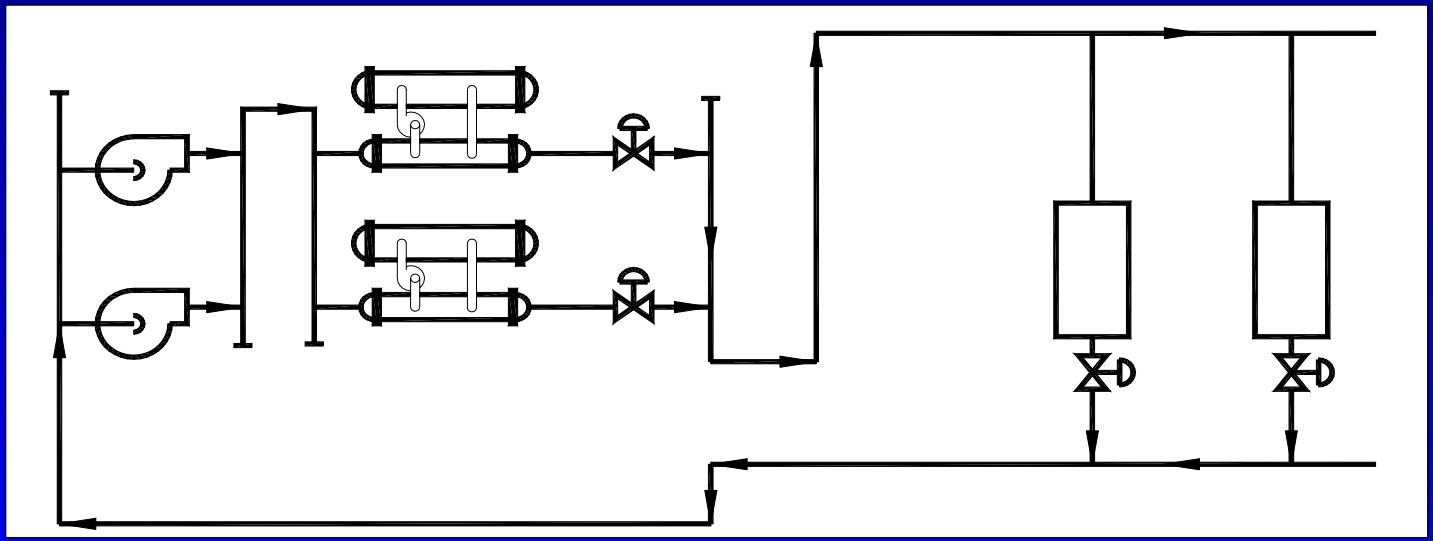

The Coil Story: Coil Laws

Air Handler Coil (Case 1)

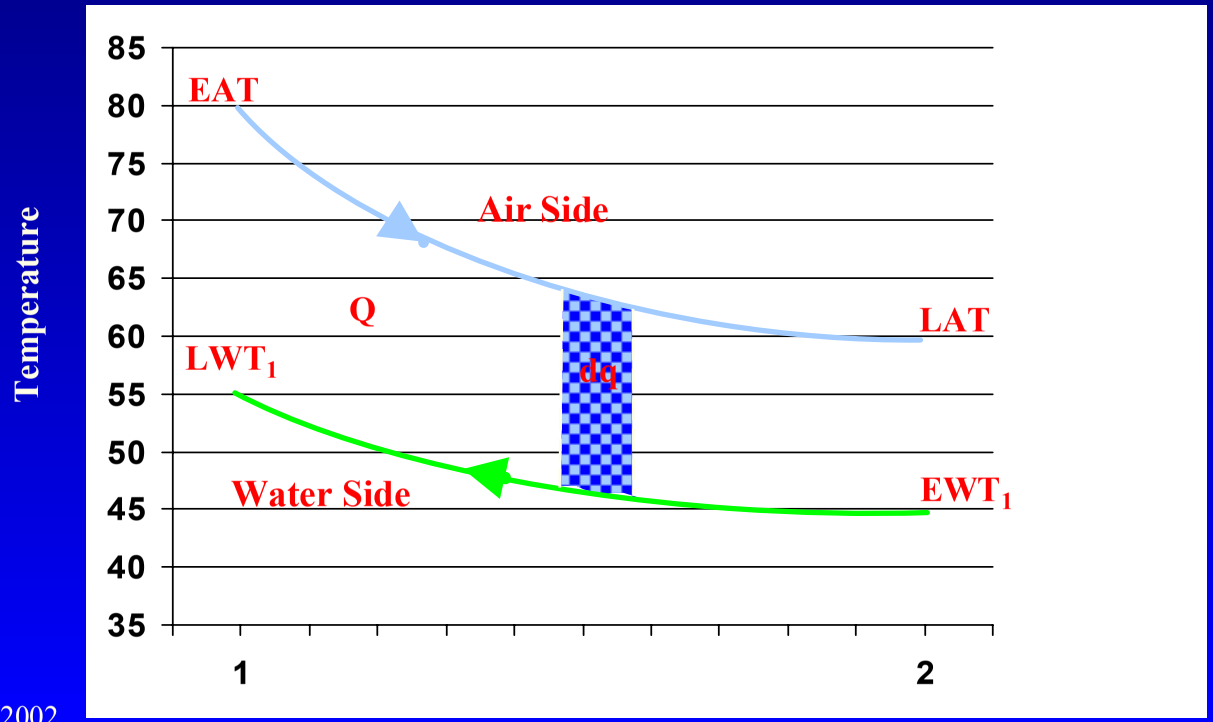

The Coil Story: Coil Laws

Air Handler Coil (Case 1 & 2)

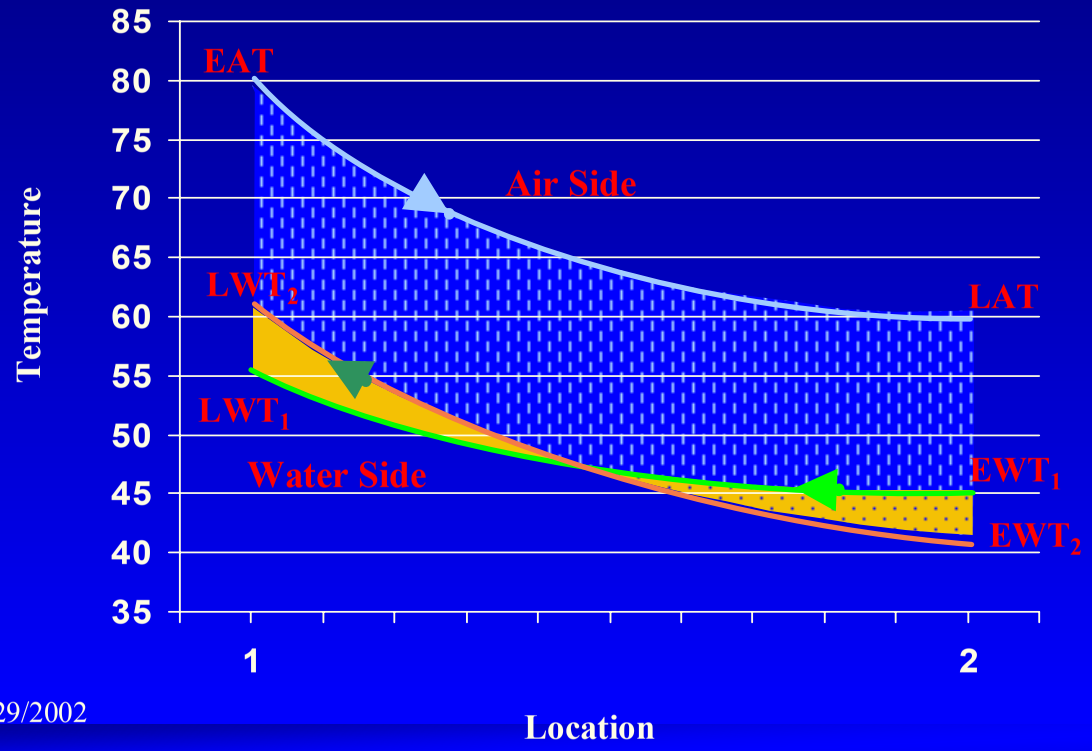

Distribution Options: Coil Simulation

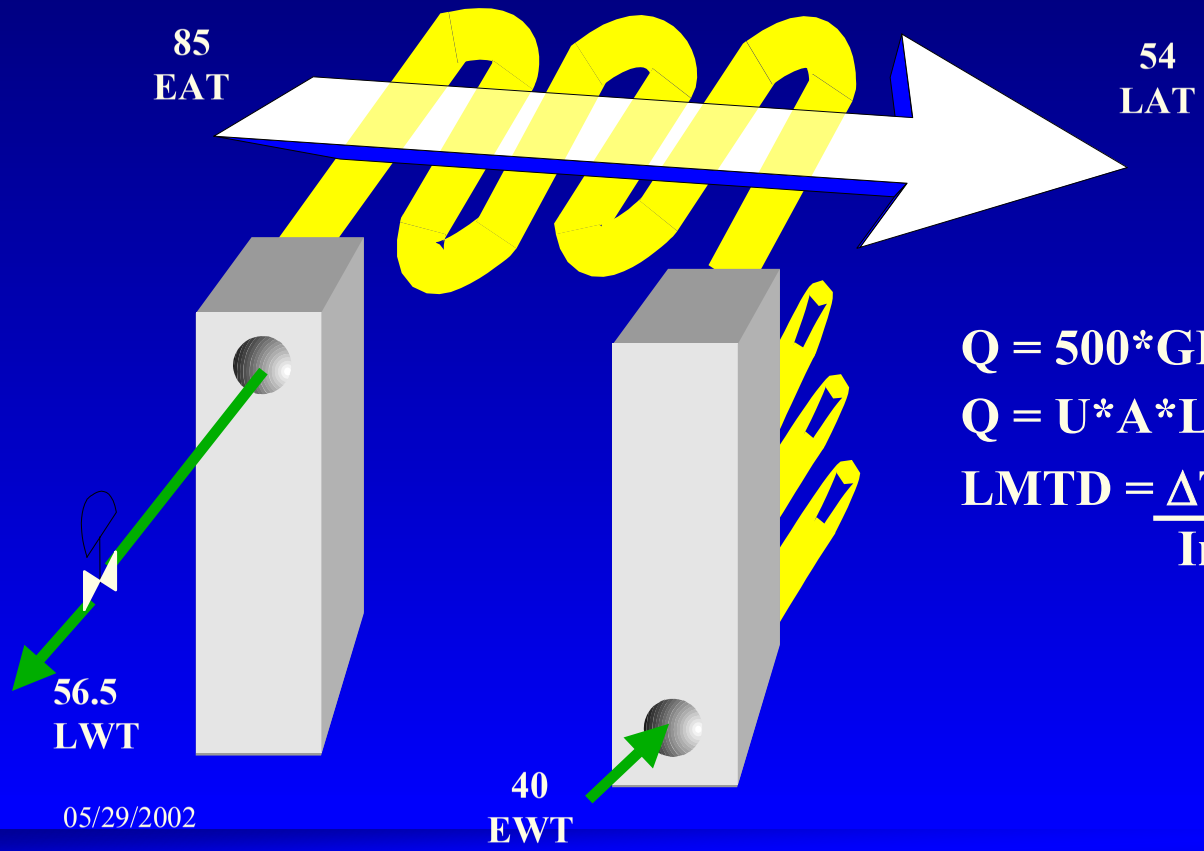

$$Q = 500 * GPM * \Delta T$$

$$Q = U * A * LMTD$$

$$LMTD = \frac{\Delta T_L - \Delta T_S}{\ln \frac{T_L}{\Delta T_S}}$$

High ΔT's are attainable at full loads. What about partial load Conditions?

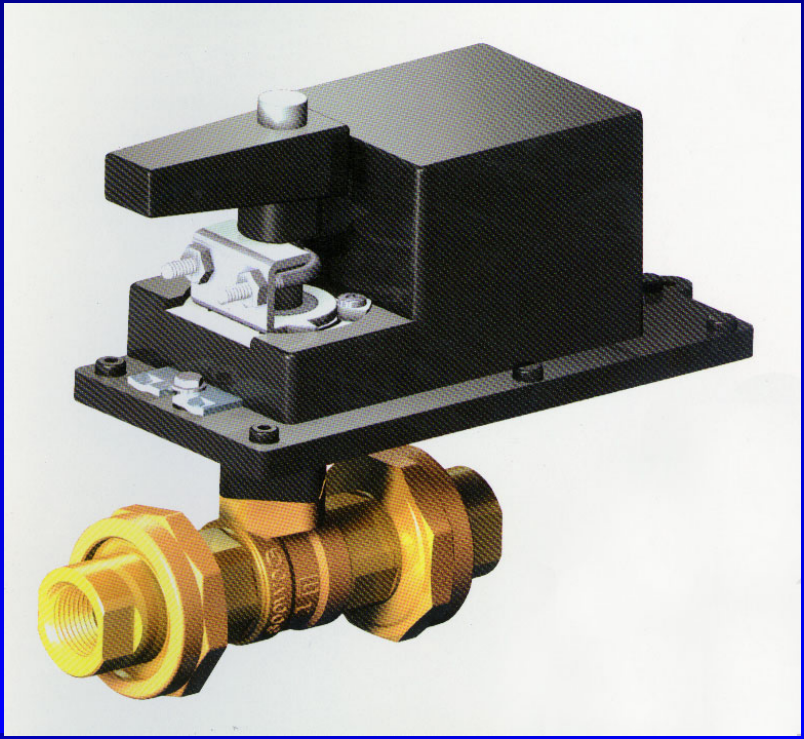

Can we maintain high ΔT with low temp supply water (40ºF)?

	45	44	43	42	41	40
CFM	12,000	-	-	-	-	-
LWT	54.8	55.2	55.6	56.0	56.3	56.6
FPS	5.6	4.9	4.4	3.9	3.6	3.3
GPM	140	123	109	98	90	83
EADB	85	-	-	-	-	-
EAWB	72	-	-	-	-	-
LADB	54	-	-	-	-	-
FV	500	-	-	-	-	-
ΔT, H20	9.8	11.2	12.6	14.0	15.3	16.6

Entering Water Temp Effects

- When we lower the EWT in a fixed coil, the LWT goes up and the velocity of the water through the coils goes down in order to cool the air to the same state point.

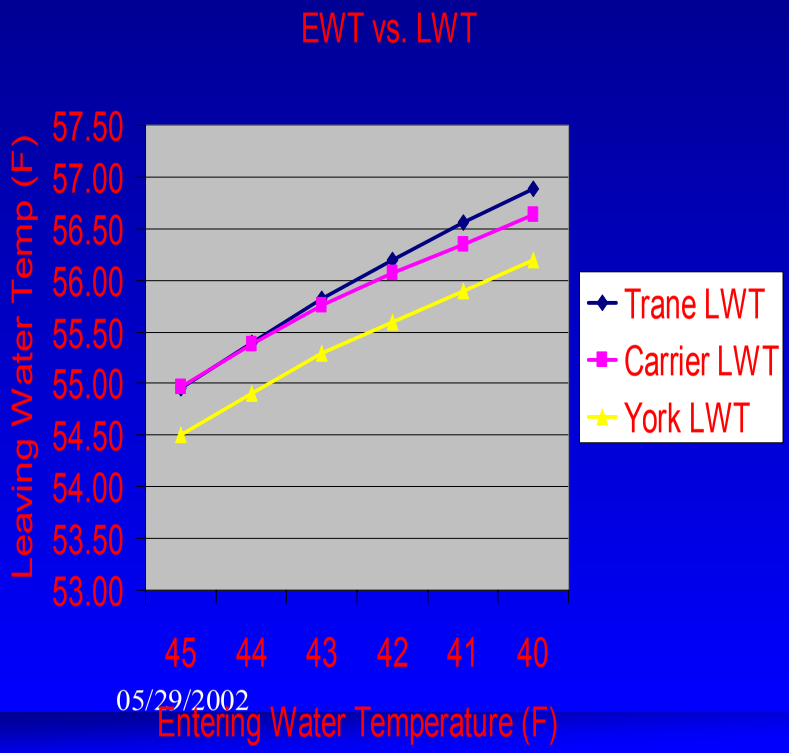

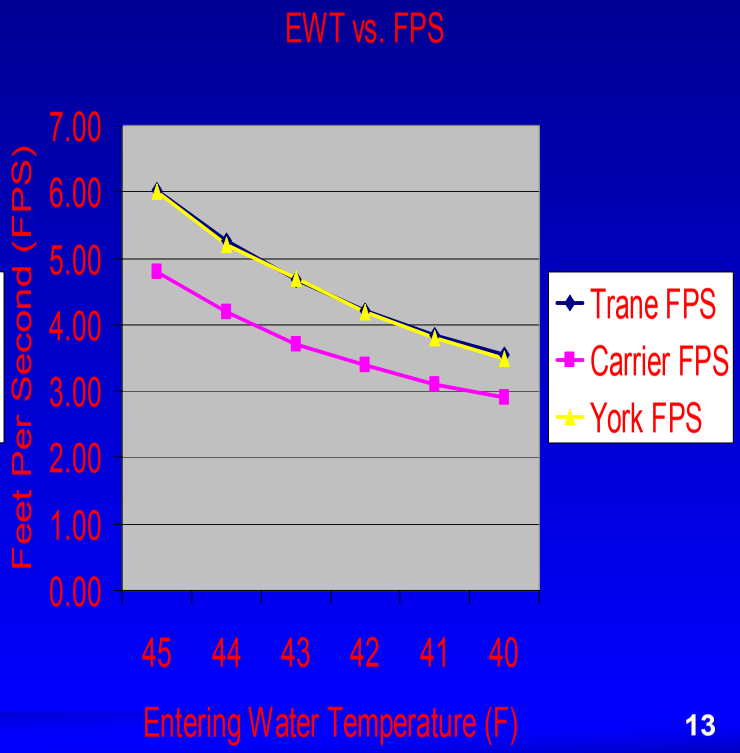

Can we maintain high ΔT at part load?

- 1. If the CFM and Face Velocity decrease, VAV Systems?
- 2. If the Leaving Air Dry Bulb temp (LADB) increases?
- 3. If the Entering Air Temp (EADB/EAWB) decreases?

- We can determine these by using very similar copper-aluminum fixed cooling coils from Trane, Carrier & York at an elevation of 1500 ft, a fouling factor of 0.0005, with 6 rows and no special coatings and a maximum air pressure drop of 1 inch.

- A fouling factor of 0.001 hr-sq ft-deg F/Btu is considered very large while 0.0005 is a dirty coil.

Decreasing Face Velocity Effects

- When we lower the CFM & Face Velocity in a fixed coil, the LWT goes up and the velocity of the water through the coils goes down in order to cool the now decreased amount of air to the same state point.

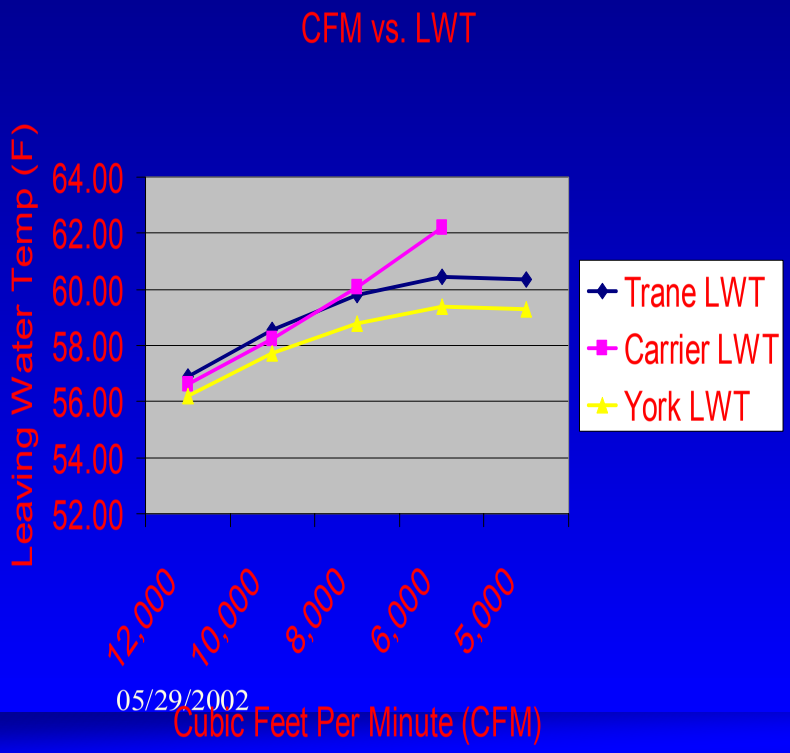

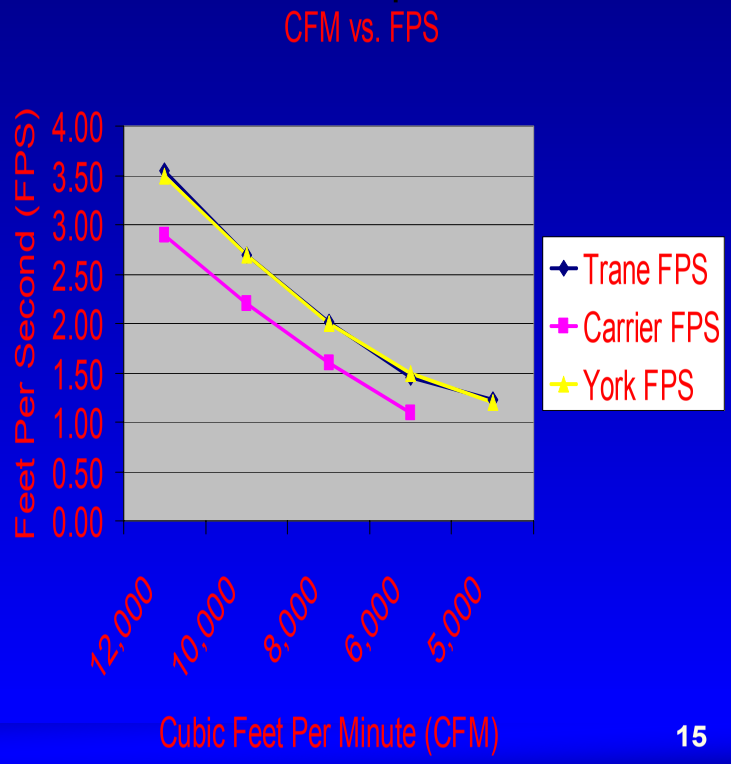

Increasing LADB Effects

- When we increase the Leaving Air Dry Bulb Temperature in a fixed coil, the LWT goes up and the velocity of the water through the coils goes down in order to cool the same volume of air to a higher state point.

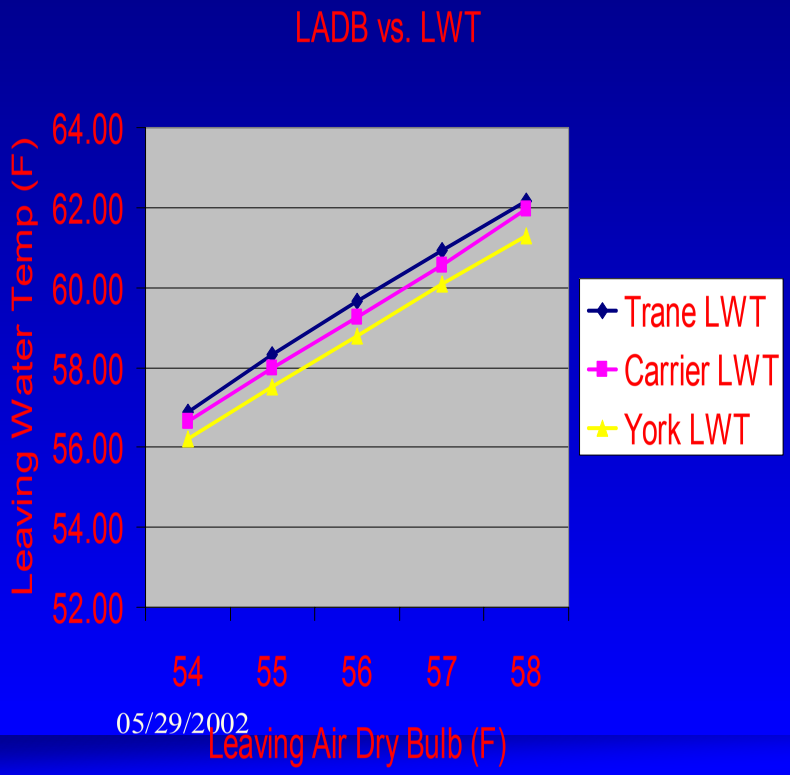

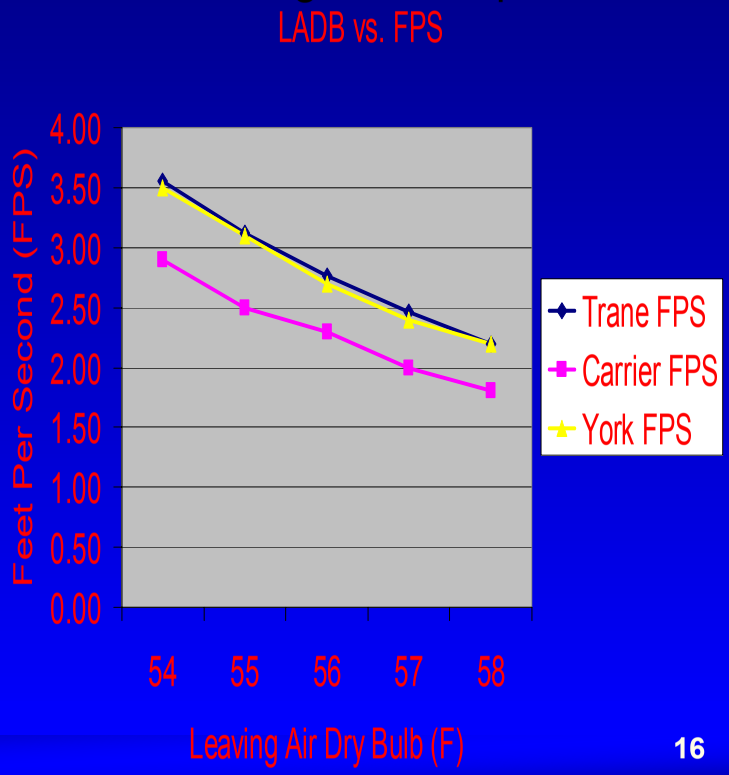

Changing Inlet Air Temperatures

- In a fixed coil, when the temperature of the outside entering air decreases, the LWT increases as the load decreases but then follows entering air temperature downwards.
- The velocity of the water through the coils drops rapidly at first, but then flattens out as the LWT decreases rapidly.

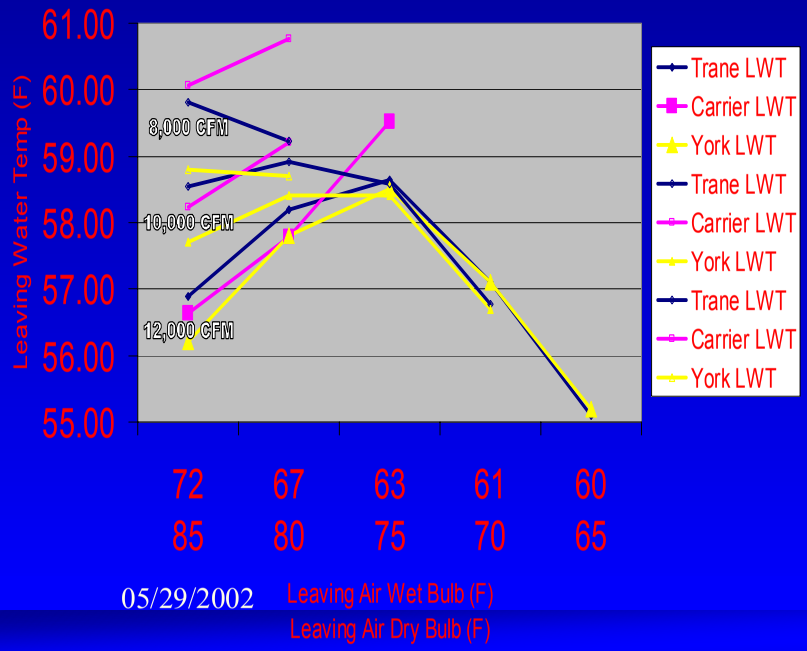

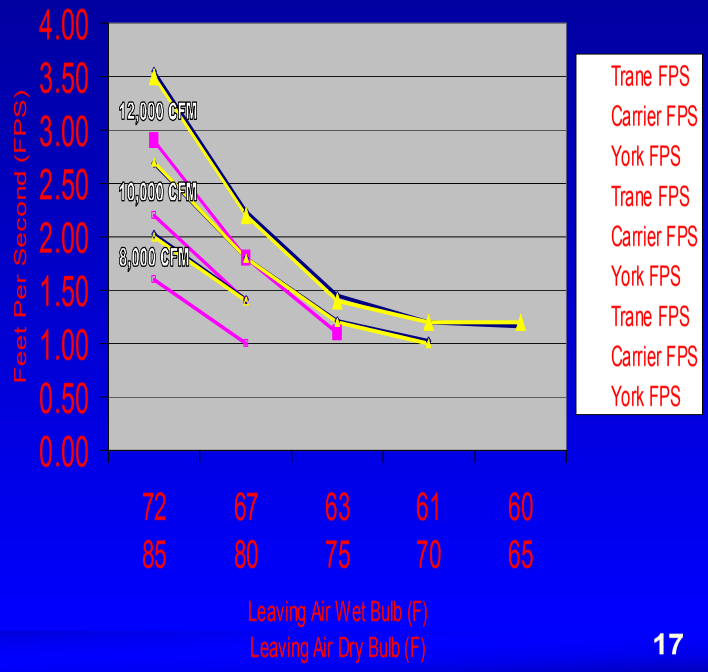

The Coil Story:

Flow Rate as a Function of Water Temperature Difference (ΔT)

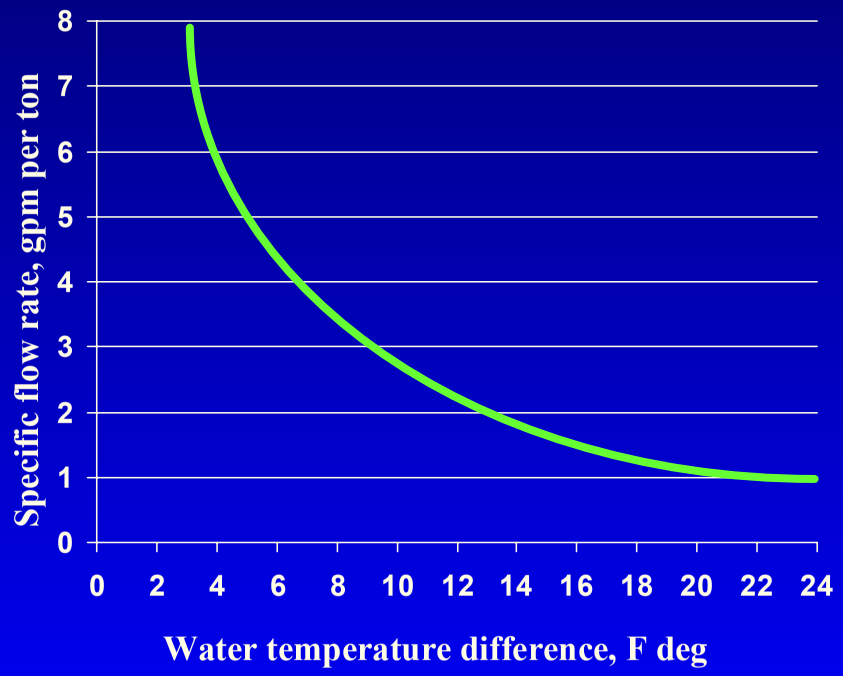

$$\frac{Q(gpm)}{Load\ (Tons)} = \frac{24}{dt(^{o}F)}$$

Solutions: Improve dT
Effect of Increasing dT on Campus Flow

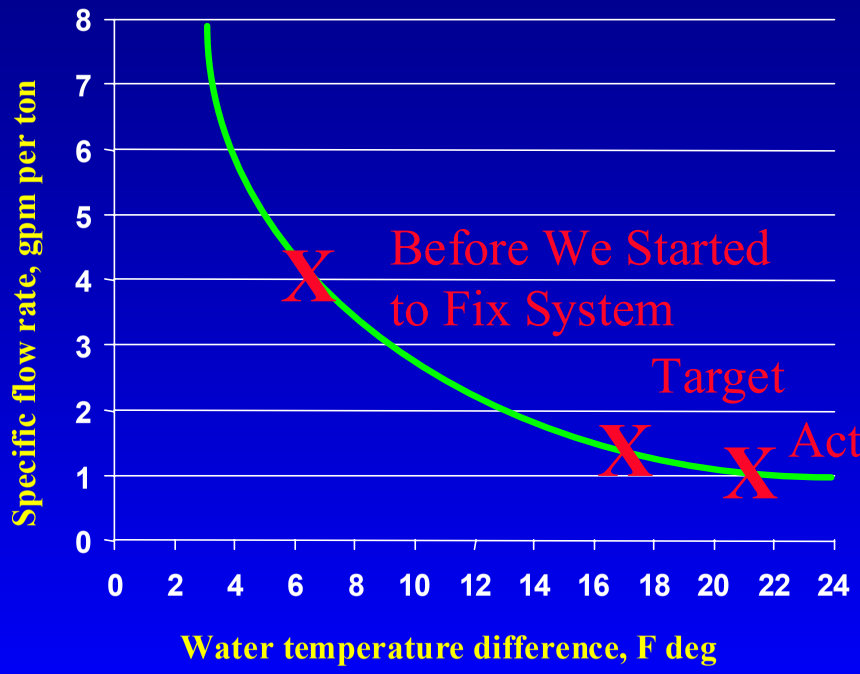

$$\frac{Q(gpm)}{Load\ (Tons)} = \frac{24}{dt(^{o}F)}$$

System Pump Hp α Q^3

But What About the Chillers?

Colder leaving water means - more energy?

???

Is This True?

Solutions: Improve dT Effect of Increasing dT on Chiller Performance

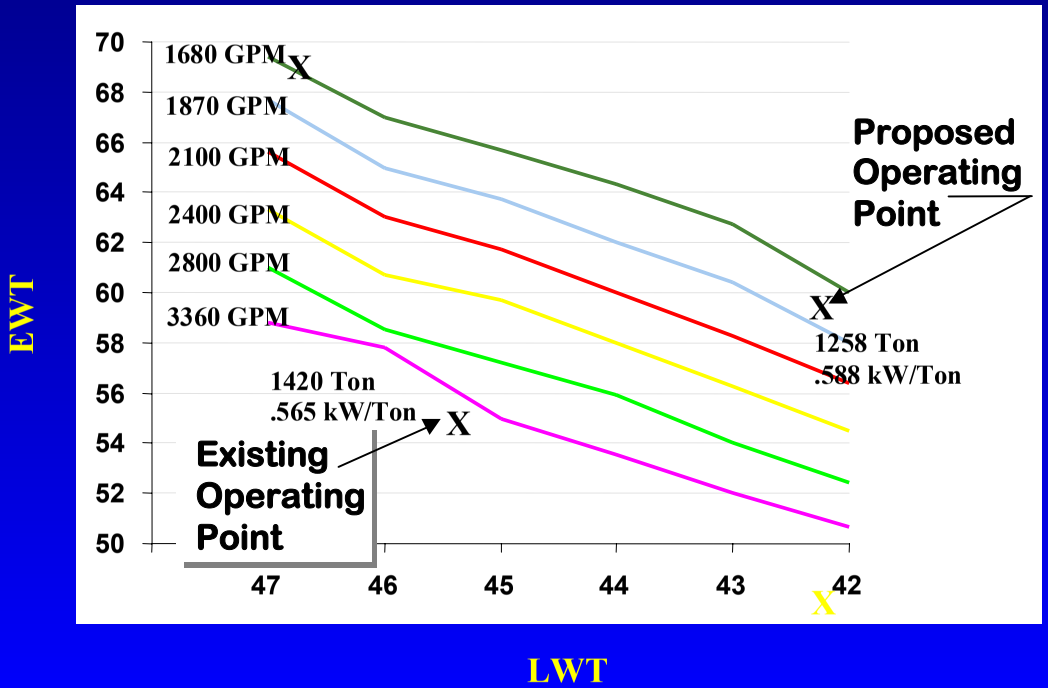

Solving Existing Building/Plant Problems

Beware of Primary/Secondary Systems

System Flow Sequencing
Primary Greater than Secondary

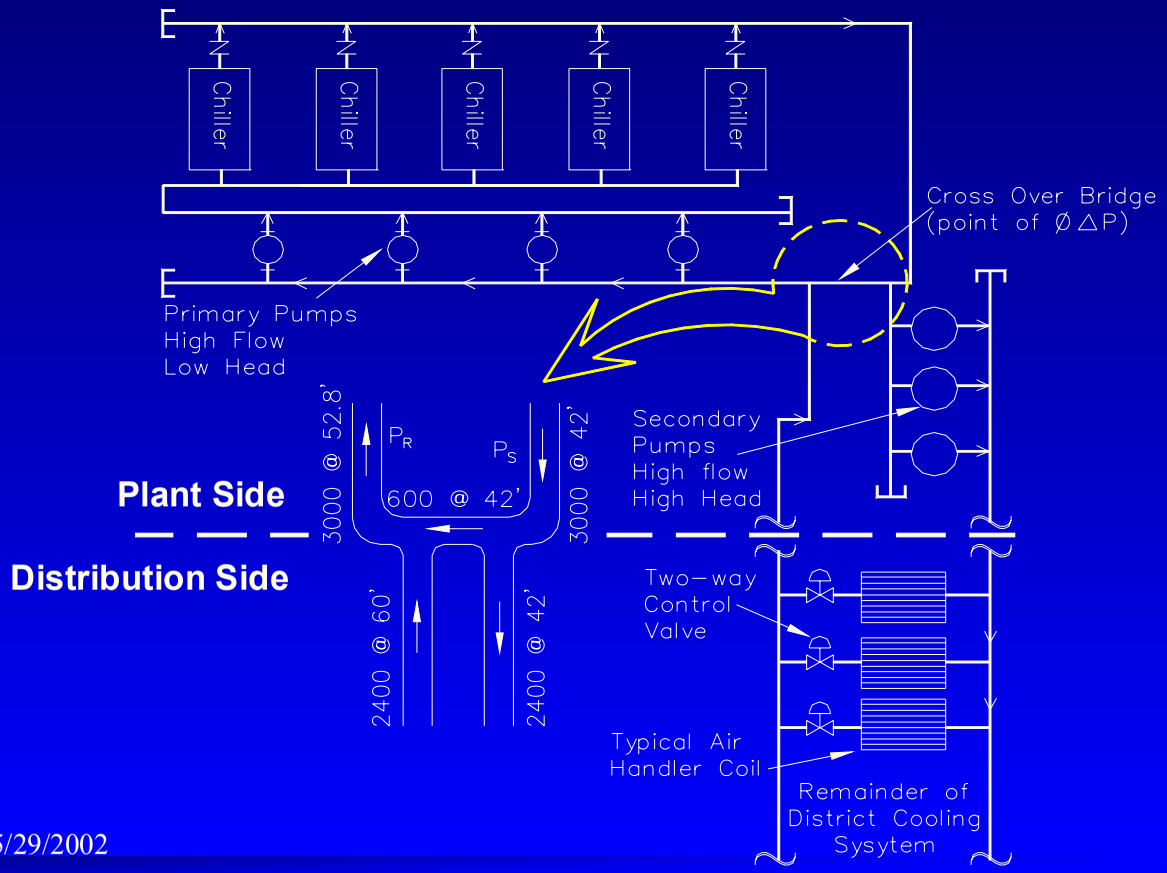

System Flow Sequencing
Secondary Greater than Primary

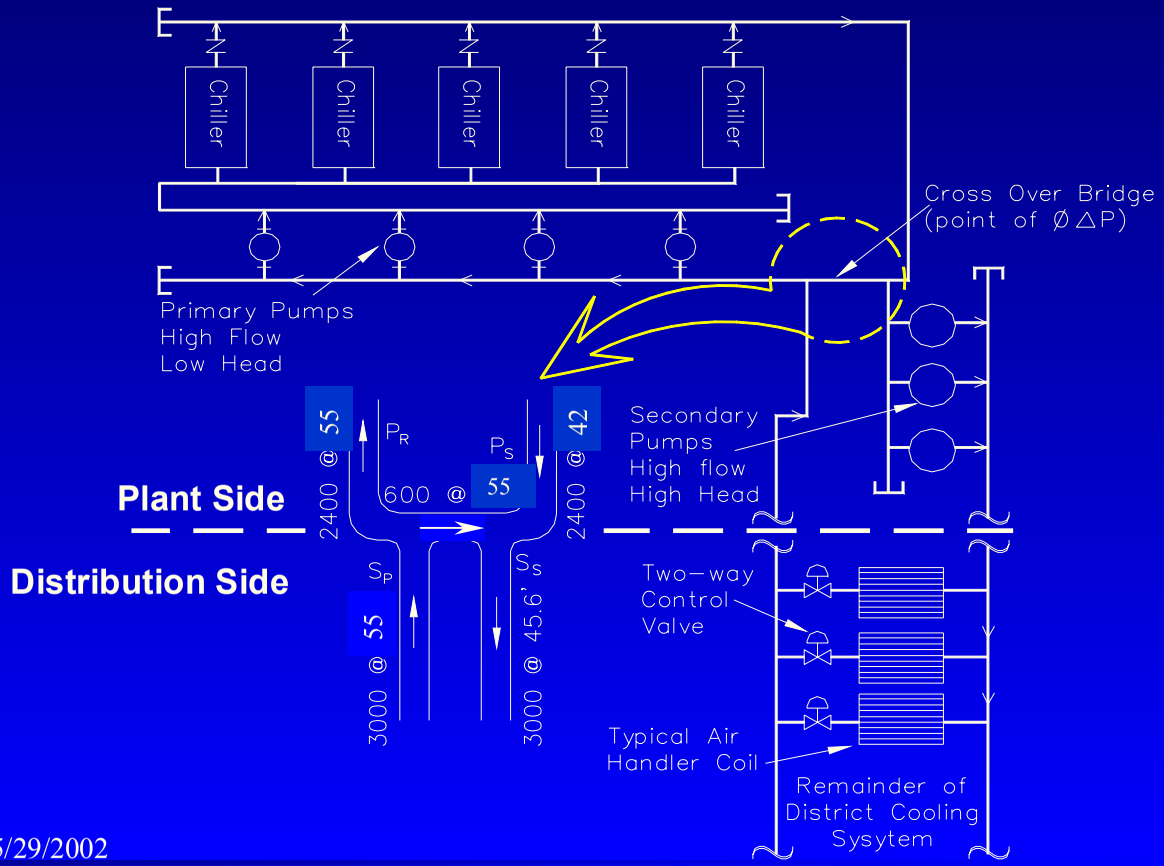

System Flow Sequencing
Primary Synchronized with Secondary

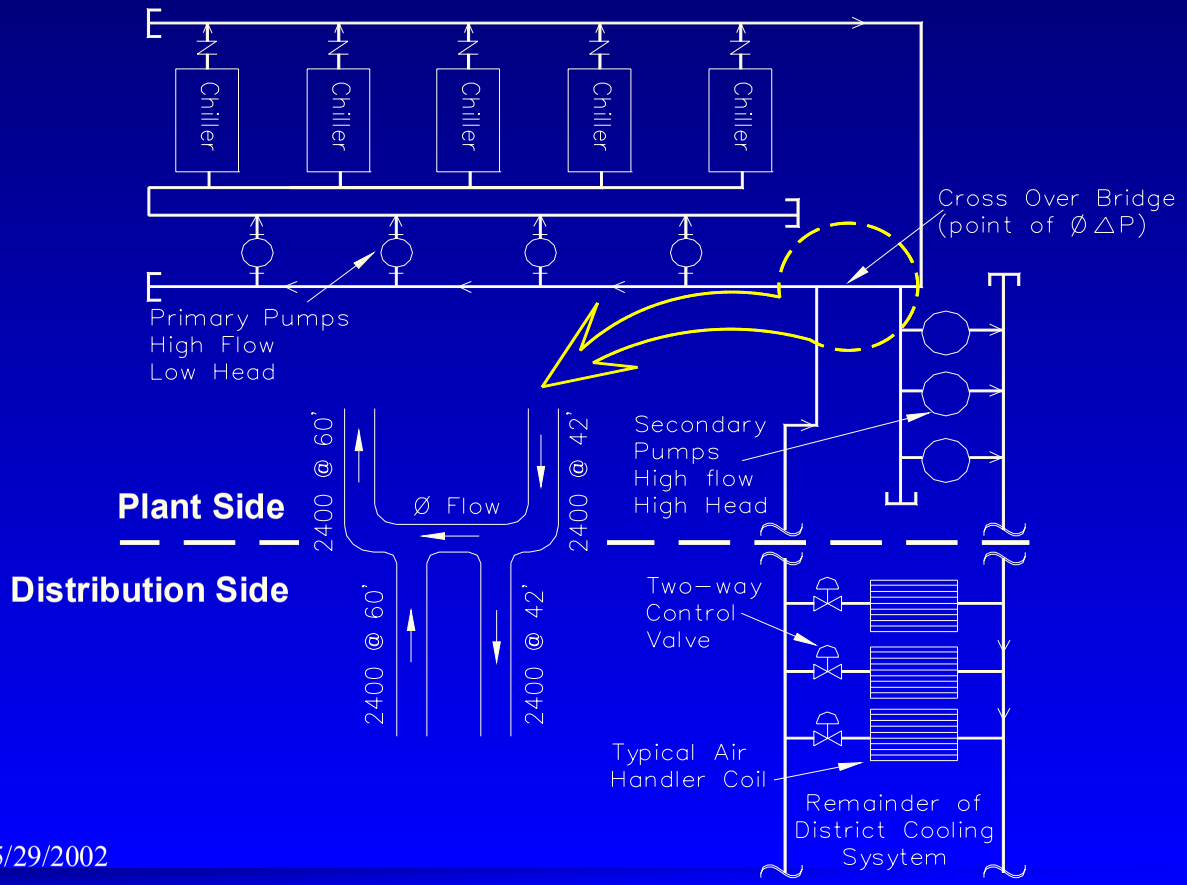

Solving Existing Building System Problems

Existing Buildings
Financial Opportunities

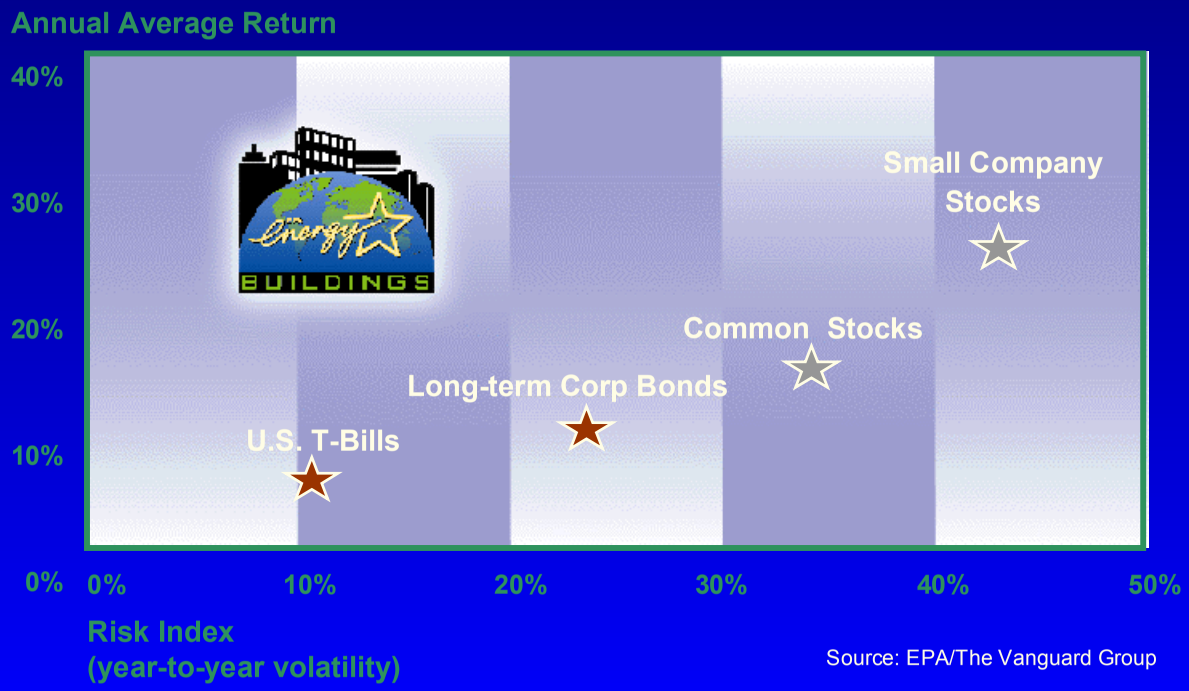

Source: EPA/The Vanguard Group

Existing Buildings
Low Flow Low Temp System Opportunities

- Waterside: aging chiller plants
  - Hydraulic opportunities
  - Energy opportunities
- Controls:
- Airside:
  - Acoustical problems?
  - Short of capacity?
- Use existing infrastructure

Existing Buildings
Coil ΔT Pirates

- Coil bypass

- Three-way valves
- Leakage
- Excess pressure
- Calibration
- Inaccurate control
- Pressure independent valves!

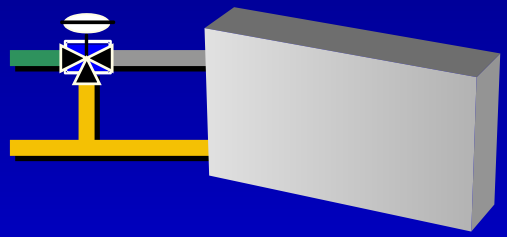

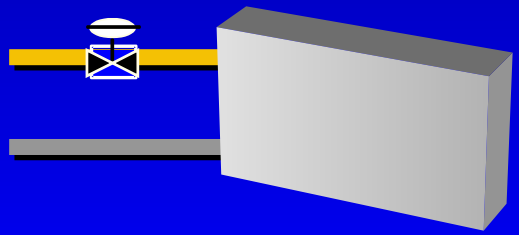

Existing Buildings
VA MC Palm Beach

2700 Tons
270 hp Distribution Pump
(90% VFD)

Initial Condition

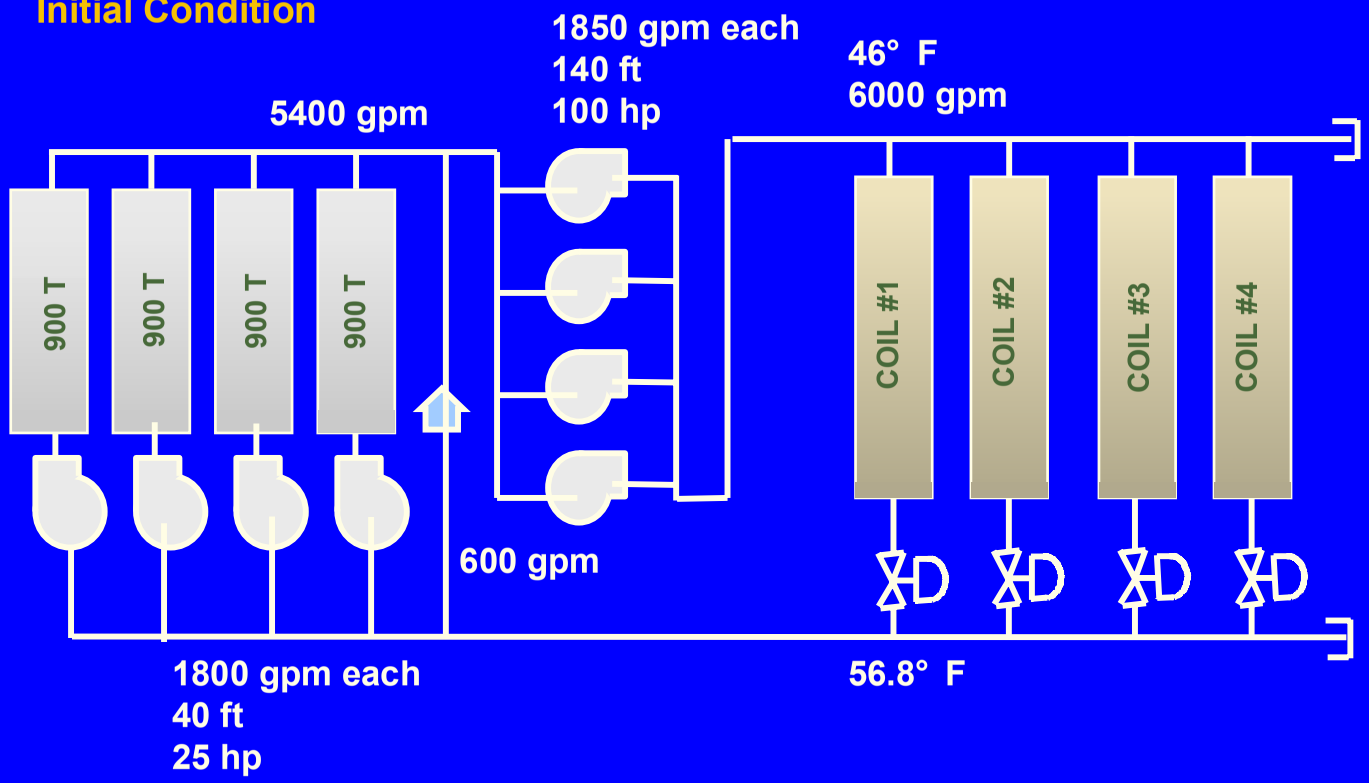

Existing Buildings
VA MC Palm Beach

2700 Tons
75 hp Distribution Pump
(73% VFD)

After adjustments

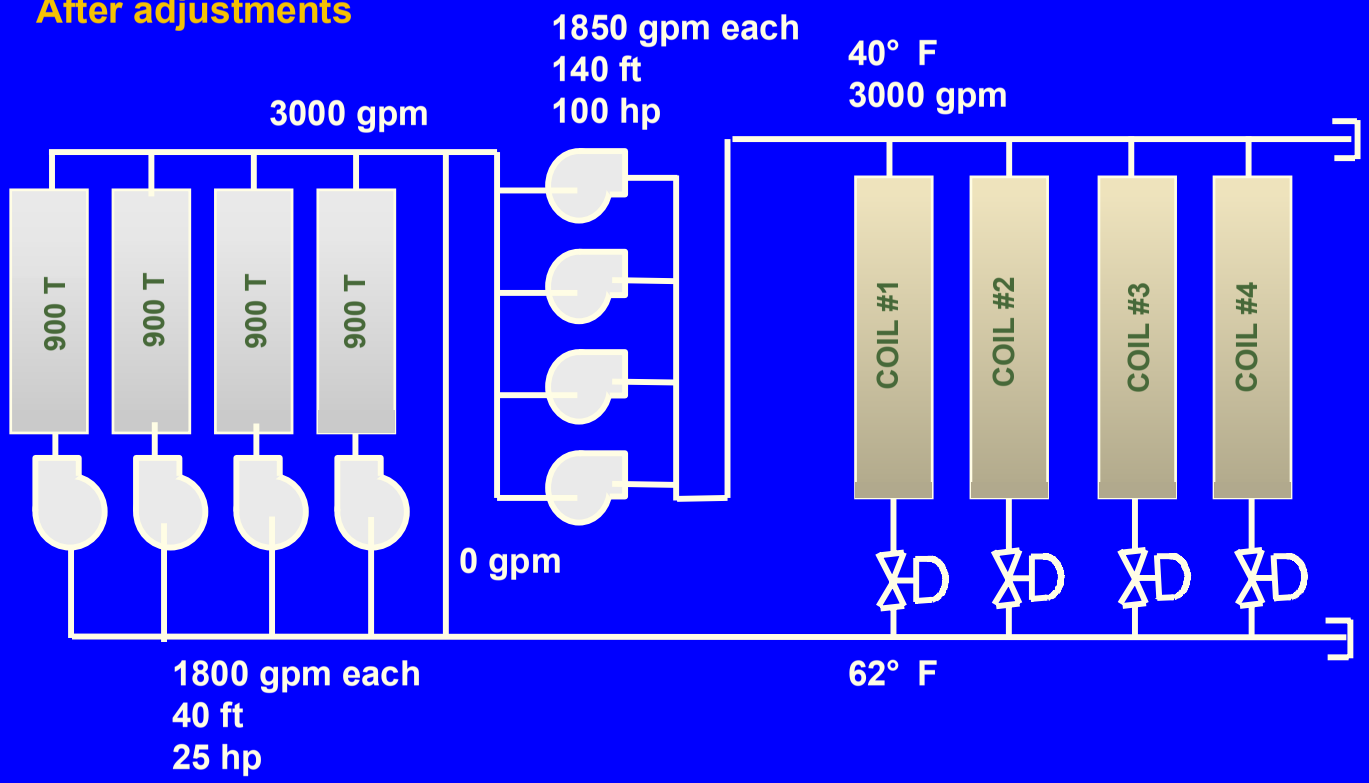

Existing Buildings
Airside Opportunities

EWT	WTR	LWT	GPM	MBH
47 °F	6.5	53.5 °F	336	1,089
46 °F	8.3	54.3 °F	263	1,089
45 °F	10.0	55.0 °F	218	1,089
44 °F	11.7	55.7 °F	186	1,089
43 °F	13.4	56.4 °F	163	1,089
42 °F	15.0	57.0 °F	146	1,089
41 °F	16.6	57.6 °F	132	1,089
40 °F	18.1	58.1 °F	120	1,089

EDB/EWB = 85 / 67
ACFM = 30,000

Existing Buildings
Halliburton Energy, Carrollton, TX

- Waterside:
  - Chillers: (4) 1000 tons with 56 to 40 LWT
  - 1,000,000 gallon thermal storage
  - All 3-way valves changed to 2-way
- Airside Conditions:
  - AHU's: (7) #80 @ 47 LAT (@ 55 LAT >#100's)
- Controls:
  - Retrofitted to today's technology!

Existing Buildings
Chiller Efficiency Upgrade?

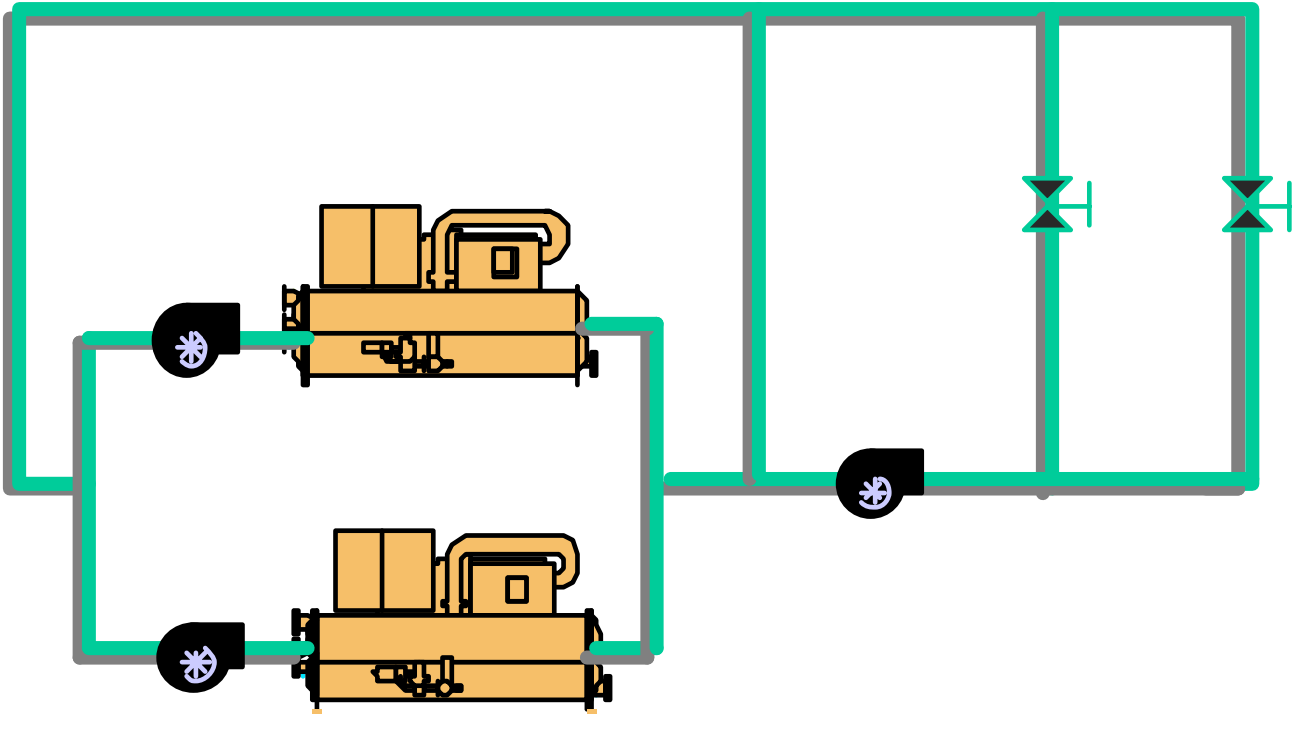

Existing Buildings

How about Series Variable Flow?

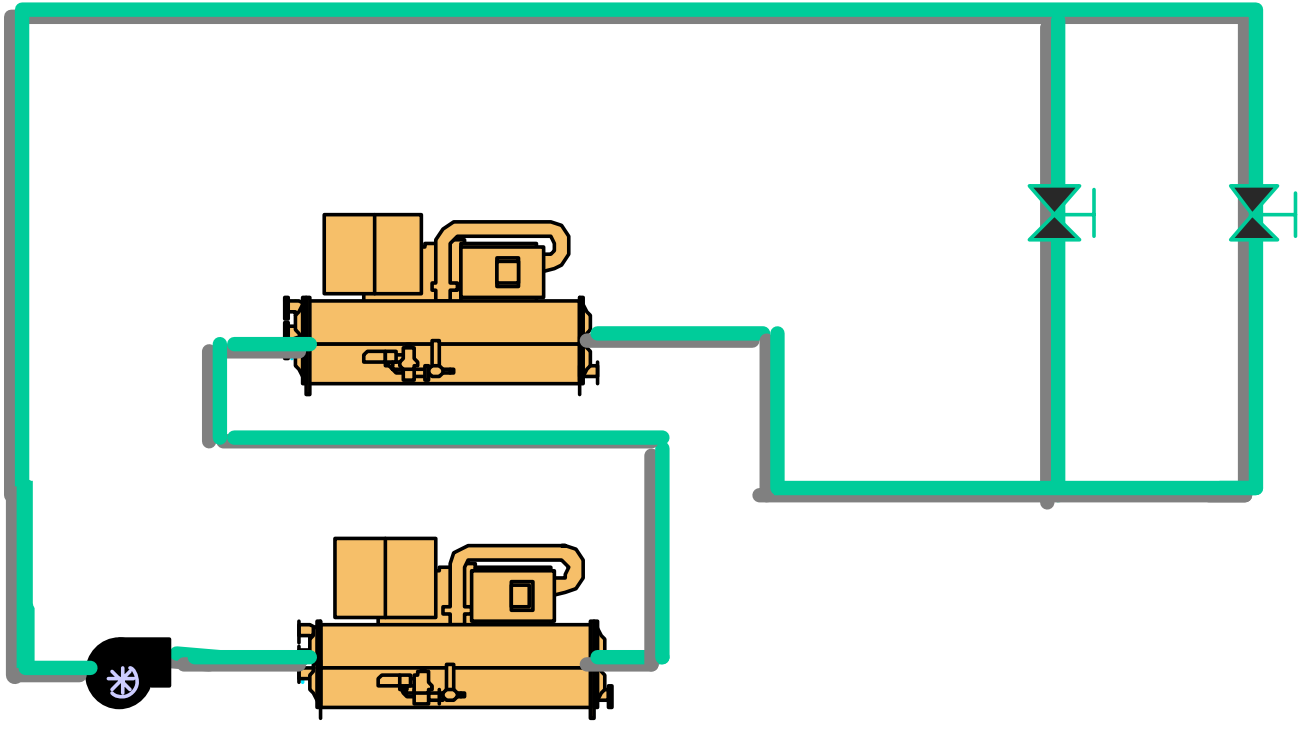

Existing Buildings
Adding an additional chiller?

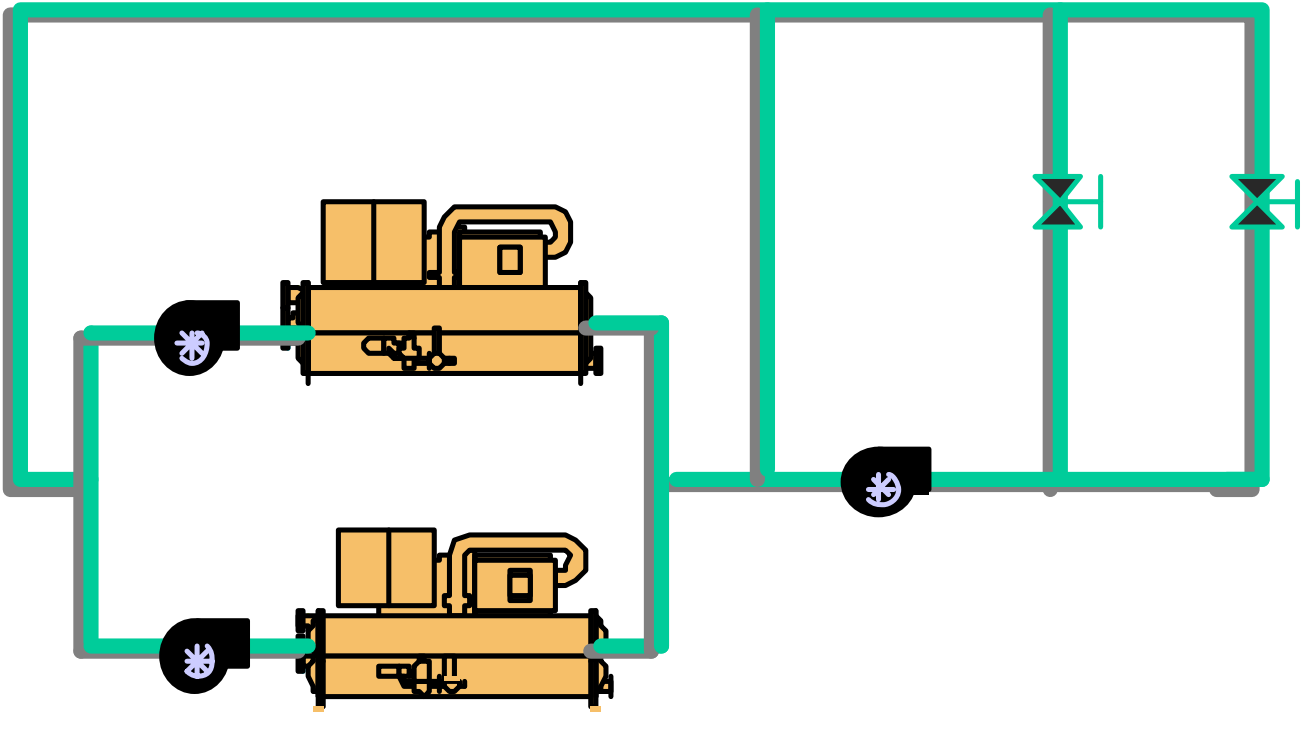

Primary-Secondary Chilled Water Distribution

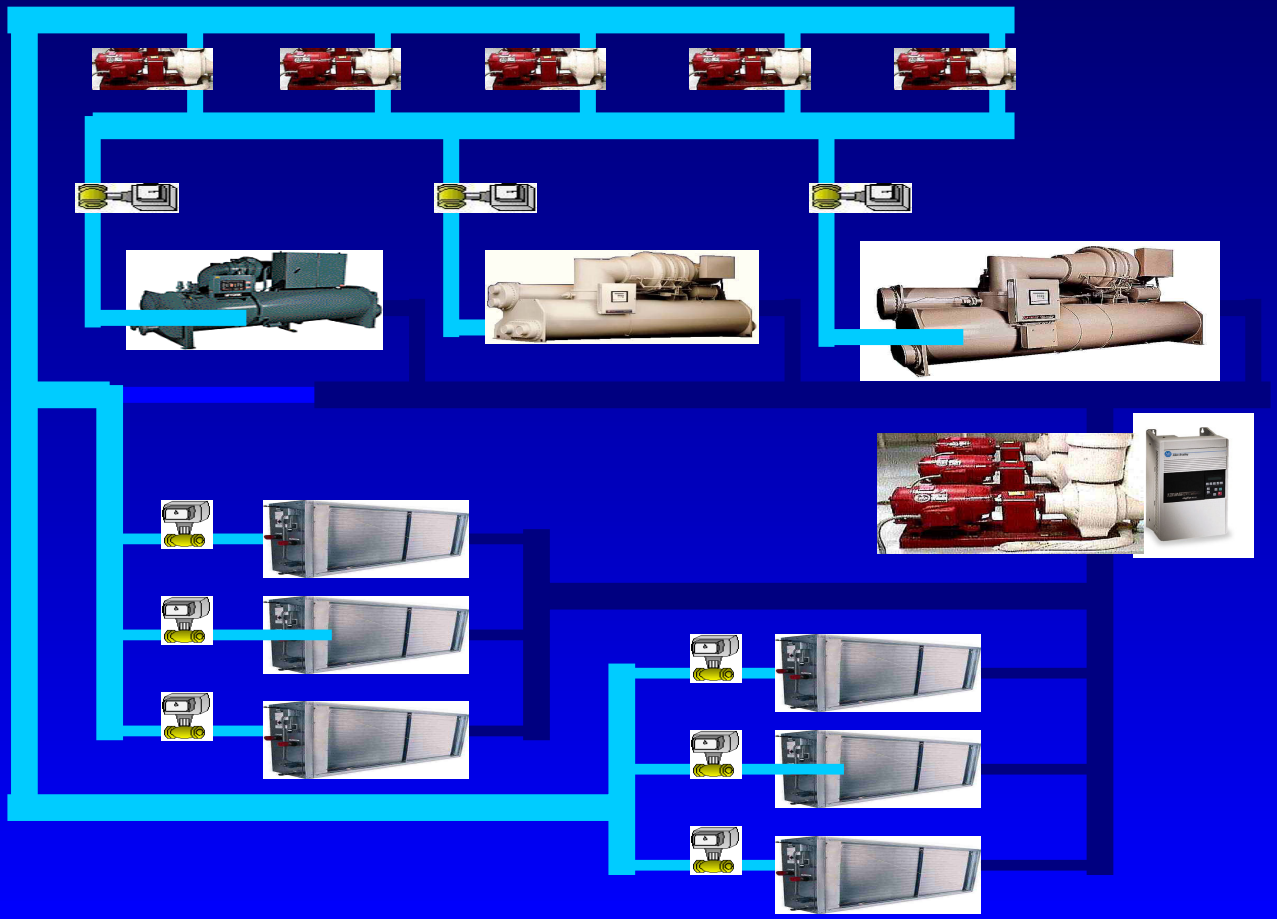

Variable Flow Primary Chilled Water Distribution

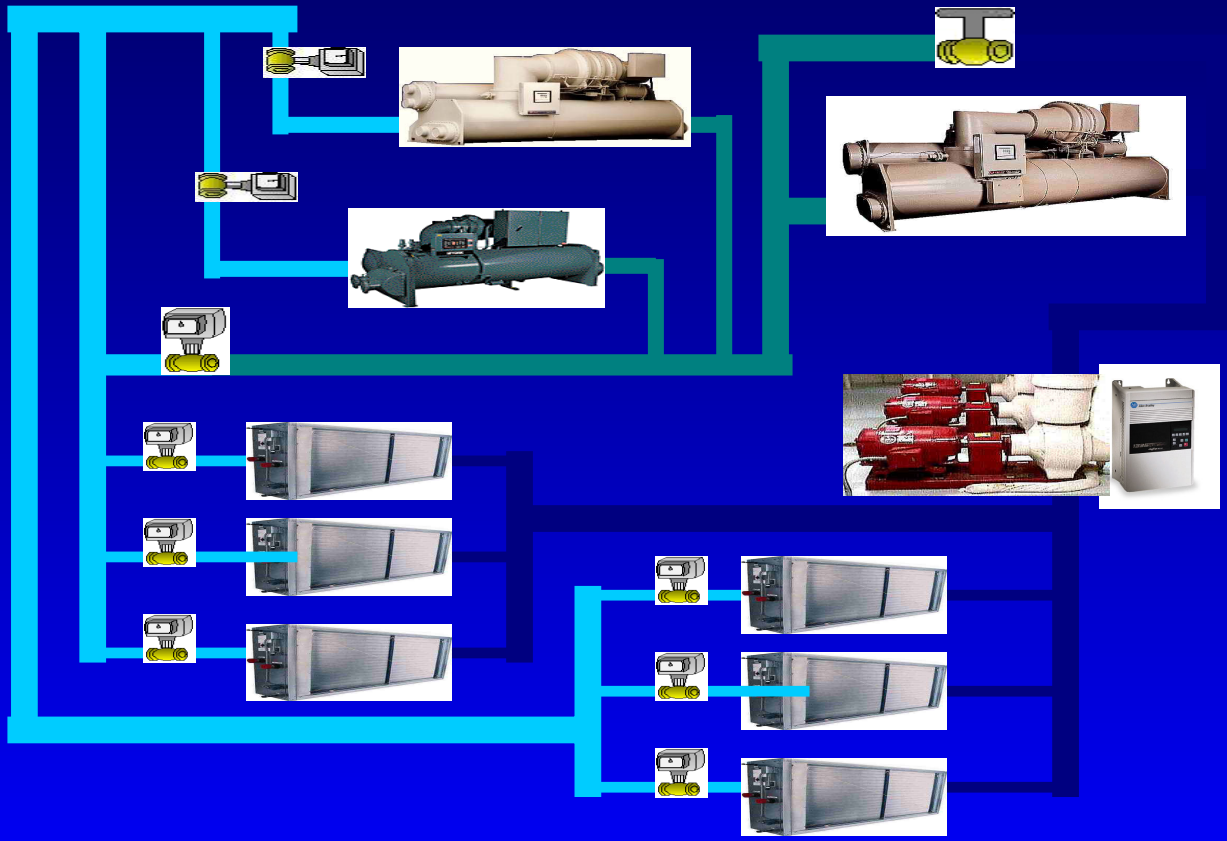

Existing Buildings
What about the cooling tower?

- For example, consider an existing system with:
  - Pipes
  - Pumps
  - Cooling Tower

500 tons x 3 gpm/ton = 1500 gpm
750 tons x 2 gpm/ton = 1500 gpm
Up to 50% more capacity!

Existing Buildings
Memphis Office Building

- Existing Situation:
  - Could not maintain comfort if OSA was over 90 degrees!
- Owner knows one chiller has to go
- Previous Proposals:
  - Short of airflow so...
  - Replace AHU's, ductworks, chillers, tower, etc.
- Is there a better solution?

Existing Buildings
Memphis Office Building

- Existing Situation:
  - Could not maintain comfort if OSA was over 90 degrees!
- Previous Proposals:
  - Replace AHU's, ductworks, chillers, etc.
- Low Flow Low Temp Solution:
  - Use existing AHU's, ductwork, tower, etc.

Solution's to existing buildings using low flow low temp

Low Flow Low Temp
New Construction Project

- J. D. Edwards, Denver, CO
- Owner occupied office campus
- Each building 190,000 sq. ft
- Budgeted and bid with rooftops!
- Owner wanted chilled water

Low Flow Low Temp
Waterside Installed Cost

Component	*18°F ΔT*	*10°F ΔT*	*Variance*
Labor	$26,639	$31,649	($ 5,011)
Pipe & fitting	$54,711	$88,177	($33,466)
Valves/special	$22,448	$36,977	($14,529)
Insulation	$ 5,888	$ 7,038	($ 1,150)
Pumps	$ 3,091	$ 4,519	($ 1,428)
Chillers			$ 2,760*
Cooling Towers			($ 1,280)
Electrical			($ 460)
Total			**($57,324) or $.30/sq. ft.**

Low Flow Low Temp System
Airside Installed Cost

Item	*45°F Cost*	*55°F Cost*	*Variance*
Labor	$167,956	$174,715	($ 6,759)
AHU's	$180,343	$208,520	($28,176)
VAV's	$158,374	$165,242	($ 6,868)
Sheetmetal	$ 70,095	$ 86,456	($16,362)
Subtotal	$576,768	$634,932	($58,164)
Electrical			($ 5,950)
Total			**($64,114) or $.34/sq. ft.**

Low Flow Low Temp System
Total System Installed Cost

Component	*45°F Cost*	*55°F Cost*	*Variance*
Airside	$576,768	$634,932	($ 58,164)
Wetside	$111,497	$168,361	($ 56,864)
Subtotals	$688,265	$803,293	($115,028)
Electrical (airside)			($ 5,950)
Electrical (wetside)			($ 460)
Total			**($121,438) or $.64/sq. ft.**

Low Flow Low Temp System
Installed Cost Savings

- $0.64 per square foot
- 6% of the entire HVAC system !!!
- $240 / Ton
- JD Edwards: ASHRAE Award

Energy System's Article

Boston Conventions Center

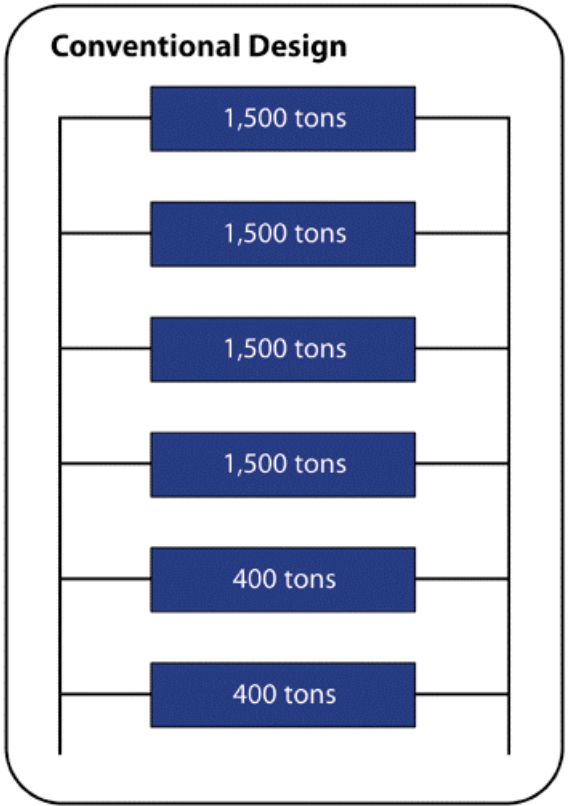

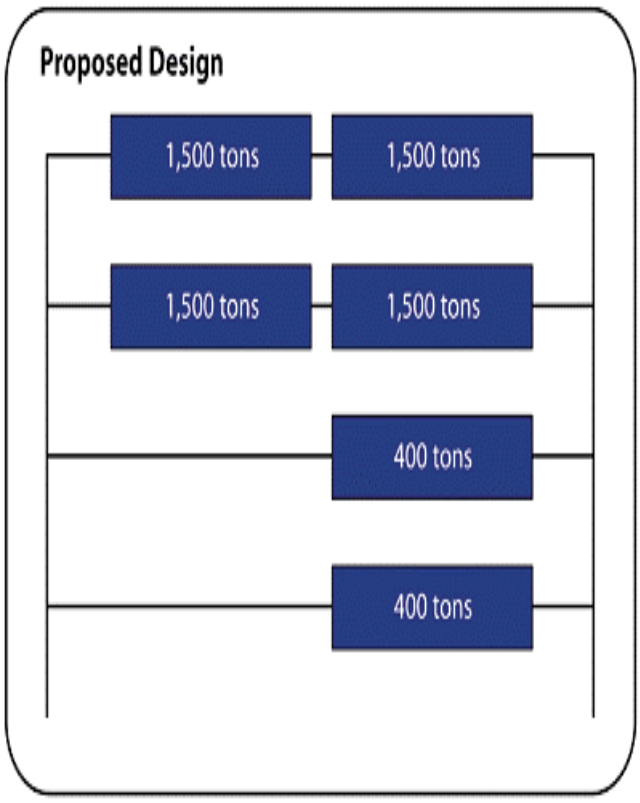

Low Flow Low Temp Summary

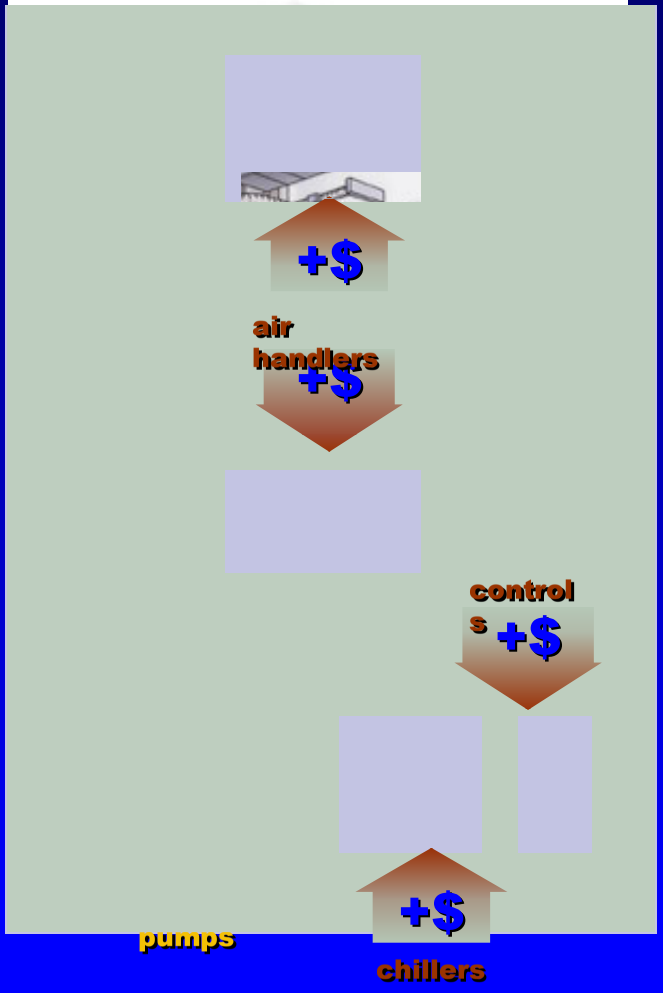

It is a design process

Waterside & Airside

- Low flow
- Low temperature
- High efficiency

Optimized Controls

Taking advantage of technology!

First Cost **Operating Cost**

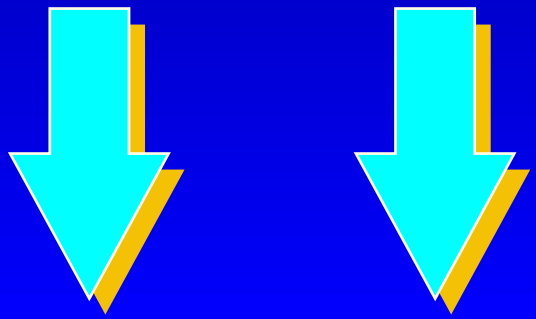

Existing Buildings
Low Flow Low Temp System Opportunities?

Major University:

- Pumps: 1000 HP running!
- Chillers: 600 tons

Case Studies

- University of Illinois, Urbana / Champaign
- University of Illinois, Chicago, East Campus
- University of Illinois, Springfield
- University of Chicago
- Colorado College
- **Northern Arizona University**
- University of Arizona
- University of New Mexico
- University of Arkansas
- New Mexico State University

Chilled Water System Improvements at the University of Arizona

Presentation Outline

Background

Problems

Solutions

Results

Background

- Campus Statistics
  - 35,000 Students
  - 12 Million sf
  - 130 Buildings
  - 5 Miles of Tunnels
  - 28,300 Tons of Refrigeration
  - 35 MW Peak
  - $16 M Electric
  - $3 M Gas

Background

Problems

Solutions

Results

Problem Statement: Before 1990

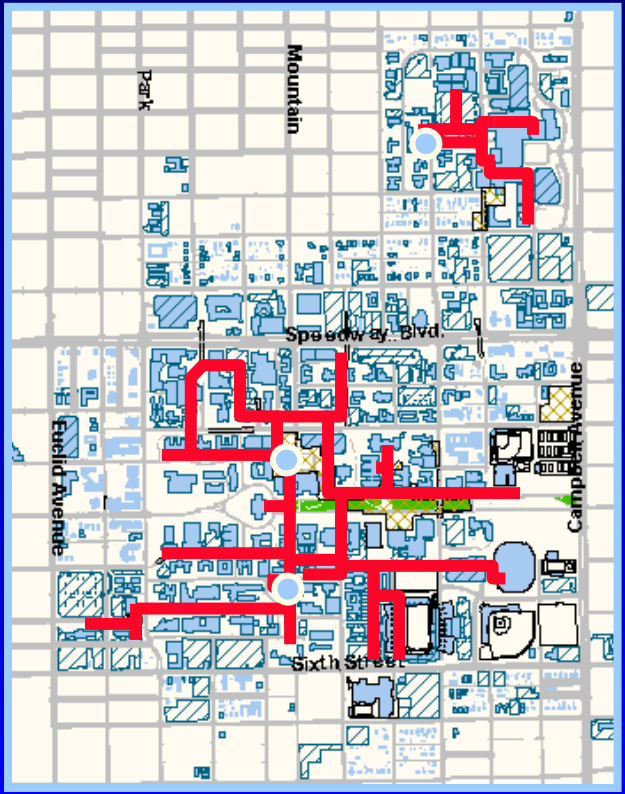

- **Technical** Problems
  - Inadequate Building Pressure at Extents
  - Insufficient Plant Capacity
  - Untreated Piping System
  - High Operational Cost
  - Trend Toward Stand Alone Building Systems

Problem Statement: Before 1990

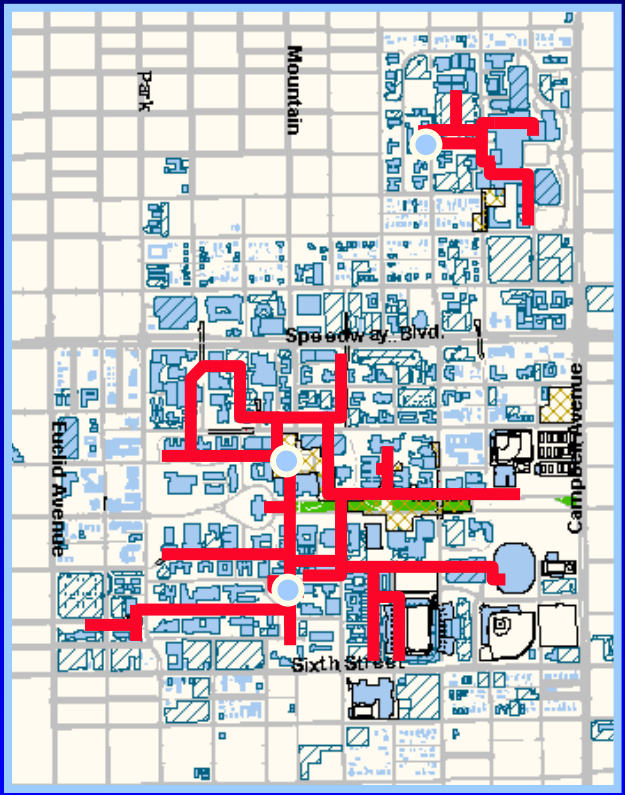

- **Management** Problems
  - Campus Growth Outstripping Utility System Capabilities
  - Utility Production & Distribution Efficiencies Tanking
  - Lack of a Long Term Development Plan or Vision

Problem Statement: Before 1990

- Inadequate Building Pressure at Extents
  - Low supply-return temperature split at buildings means high flow/ton from plant
  - High flow means high pressure drops from plant to distant buildings
  - Valves lift off near plant
  - Addition of Booster Pumps at distant buildings and Return Pressure > Supply Pressure
  - Operation of "Dead Chillers" to improve distribution flow

Problem Statement: Before 1990

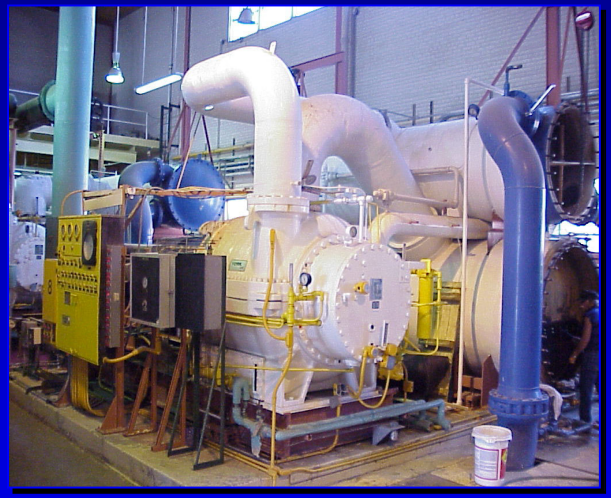

- Plant Capacity
  - Aging Chiller Fleet
  - Entirely R-11 and R-12
  - 1.0-1.2 kW/Ton
  - Plugged Tubes
  - Dedicated Chiller Piping
  - Refrigerant Leaks
    2 K lbs. R12
    1500 lbs. R11 annual loss
  - Noisy

Problem Statement: Before 1990

- Piping system
  - No Shutdowns: Poor Isolation
  - Interior Corrosion and Scale, Rust, Plastic Bags, etc.
  - Thinwall Pipe

Background

Problems

Solutions

Results

Solutions: 1990 - 2001

- Phased Approach
  - Production
  - Distribution
  - Operations
  - Management
- Phase I - V Complete
- Phase VI in Planning
- Funding
  - Infrastructure Renewal
  - Support from Capital Projects
- Support of Administration
- Training

Solutions:1990-2001

- Construct New Production Plant at weakest part of Campus (CRB)
- Improve Building System Temperature Differential and Plant flow/ton
- Interconnect Plants Physically then Operationally
- Convert distribution system from Radial Arms to Interconnected Grid
- Replace and Expand Production Capacity
  - CFC Phase Out
- Integrate Central Plant Automation

Solutions: Construct CRB

- Initial Capacity
- Piping Configuration
- Hydronic Economizer
- Neighborhood Issues
- Noise
- Odors
- Aesthetics

Solutions: Improve dT System Improvement Components

- Coil Control Valves
  - Replace 3-Way Valves
  - Recalibrate 2- Way Valves
  - Eliminate Other Sources of Mixing
- Pumps
  - Remove Secondary Pumps in Buildings
  - Install New VFD Pumps at Plants
  - Revise Pressure Control Philosophy
- Chillers
  - Add Controls to Allow Variable Flow
  - Lower Set Point from 45 to 42 F

Solutions: Improve dT
Coil Control Valve Mechanics

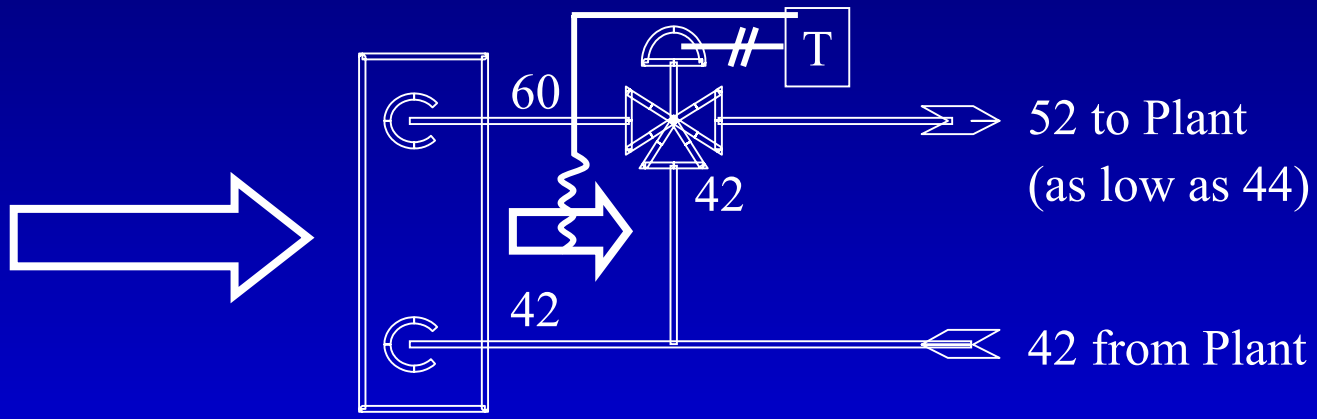

Three Way Valve

- Maintains Constant Flow to Plant
- Contaminates Return Temperature

Solutions: Improve dT
Coil Control Valve Mechanics

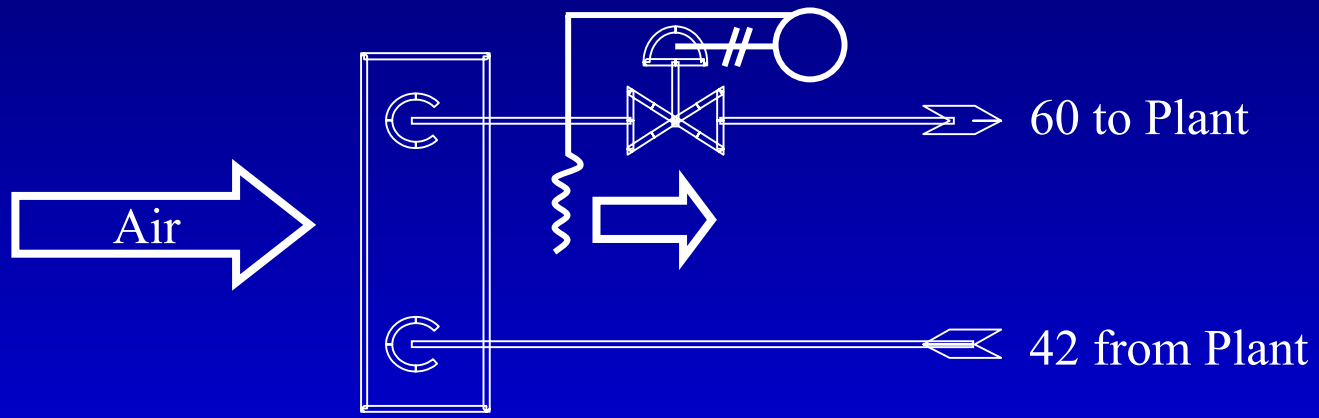

Two Way Valve

- Variable Flow
- No Mixing
- Potential to Lift Off Seat at about 20 lbs.

Solution: Interconnect Plants

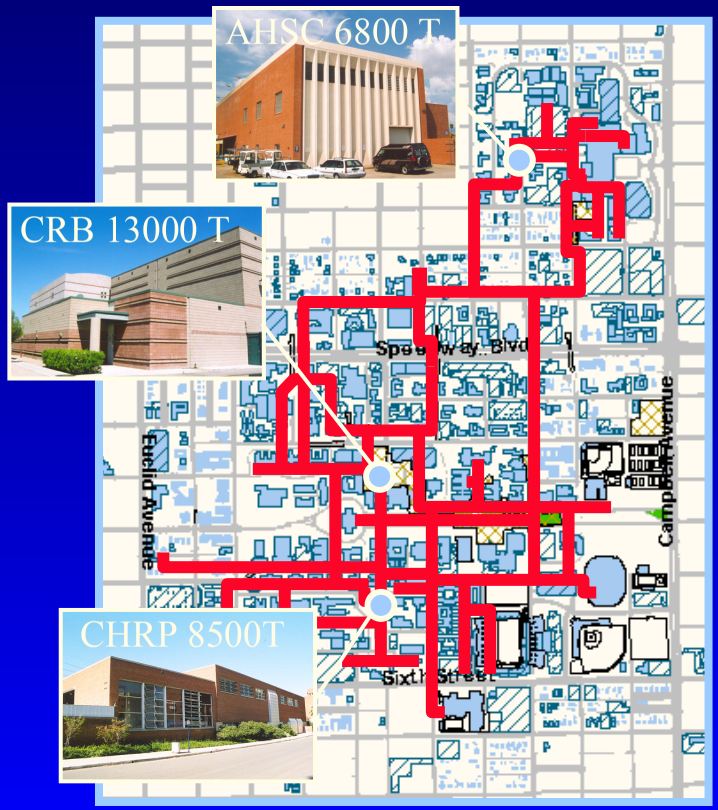

- Technical Solution
  - Connect Pipes
- Operational Solution
  - Coordination
  - Communication
  - Control Strategies

Solution: Convert to Grid Radial Distribution with Plant Pumping

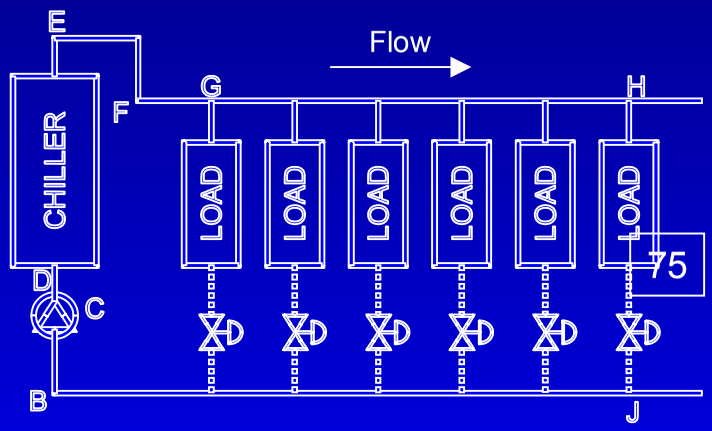

Radial Distribution, Plant Pumping

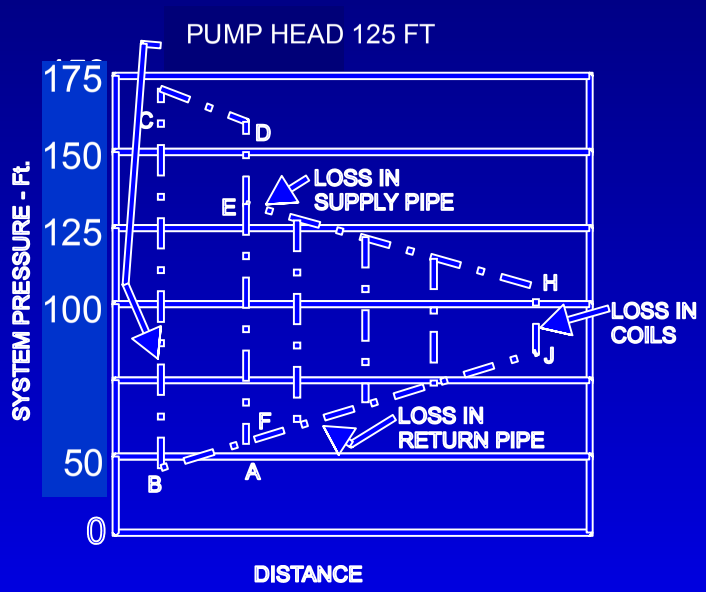

Pressure Gradient:
Radial Distribution Plant Pumping

Solution: Convert to Grid Grid Distribution with Plant Pumping

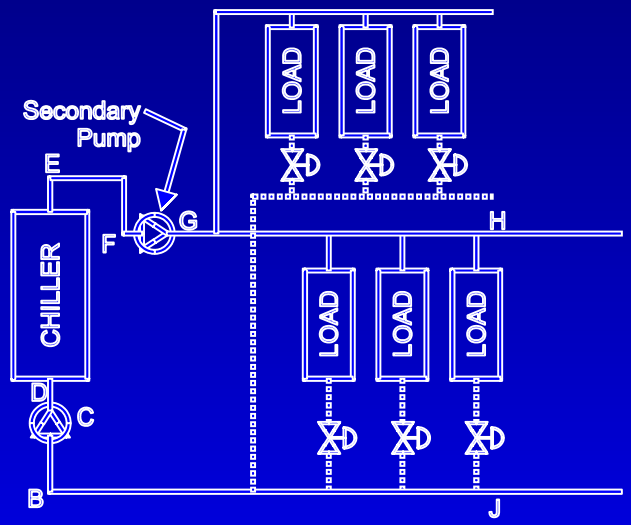

Grid Distribution, Plant Secondary

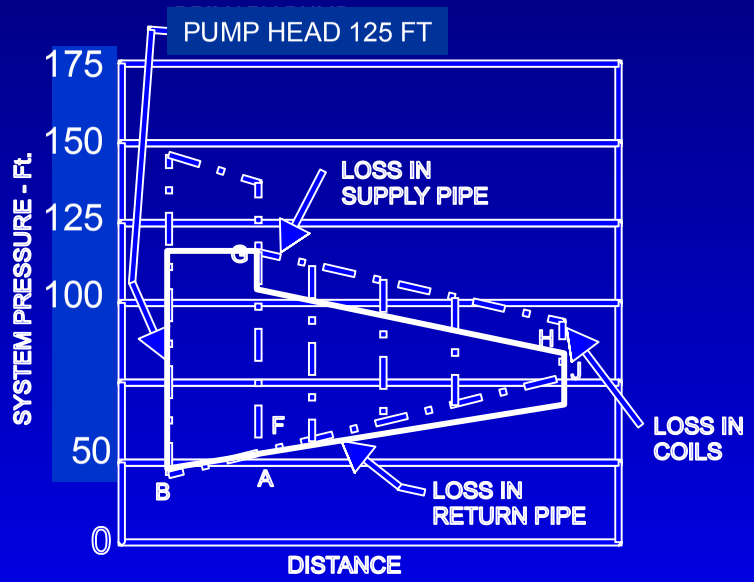

Pressure Gradient:
Grid Distribution Plant Secondary

Solution: Convert to Grid

- Large Diameter Direct Buried Pipe Rings Campus
- Very Little Distribution Pressure Loss
- Very Amenable to Load and Building Growth
- Storage

Solution: Replace and Expand Capacity

- 16,500 Tons in 3 Years
- Dual Compressor
- Single Pass Counterflow
- R 123
- Low noise
- Modular Size
- High Turn Down
- Low Pressure Drop

Solution: Replace and Expand Capacity

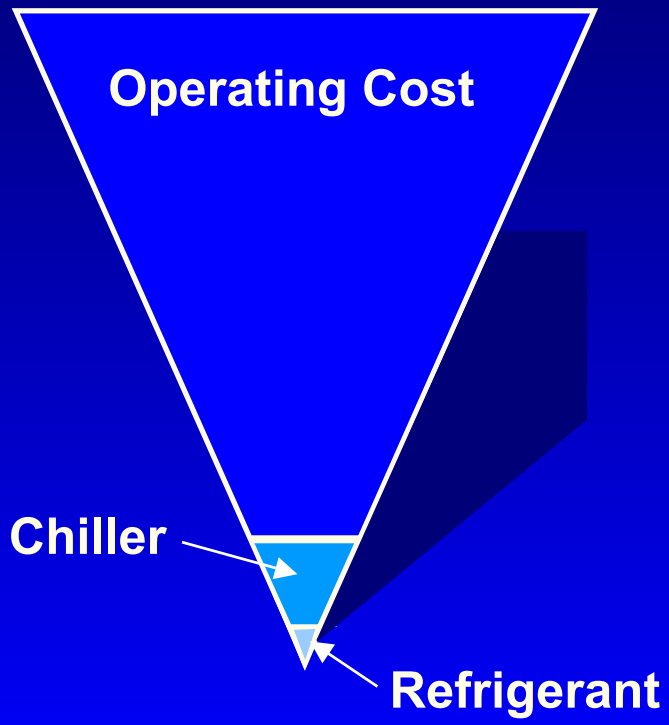

- Evaluate Chiller Bids with Life Cycle Economics using Realistic Operational Profile
- High Efficiency
- Include Maintenance Costs in Life Cycle Economics

Solution: Clean Up Water

- Side Stream Filtration
- Color Water
- Treat Water

Background

Problems

Solutions

Results

2001 Results

- Circa 1990
  - System Dt range
    - 4 F-11 F
  - Oldest Chiller: +25yrs
  - Avg: .85 kW/ton
  - Annual kW with xxx sf
  - CFC loss/yr- lots
  - Fouled Piping System
- Circa 2000
  - System dT range
    - 16 F-21 F
  - Oldest Chiller: 15 yr
  - Avg: .52 kW/ton
  - Annual kW with yyy s
  - CFC/ loss yr-none
  - Clean Piping System

Future

- Ongoing Optimization
- Interface with Combined Heat and Power Operation
- Interesting Opportunities for Ice Storage at CRB
- Encourage Optimized Ownership of Systems by Operators and Maintenance People
- Continue to Look at Ways to Keep dT Up

Elements of Success

- Continuity of Administrative Support
- Implementation of Management to Overcome Operational Inertia
- Fortitude to Work Through Cost and Campus Disruption Issues to Solve Problem

HVAC System: Chilled Water

- Capacity--See Overheads

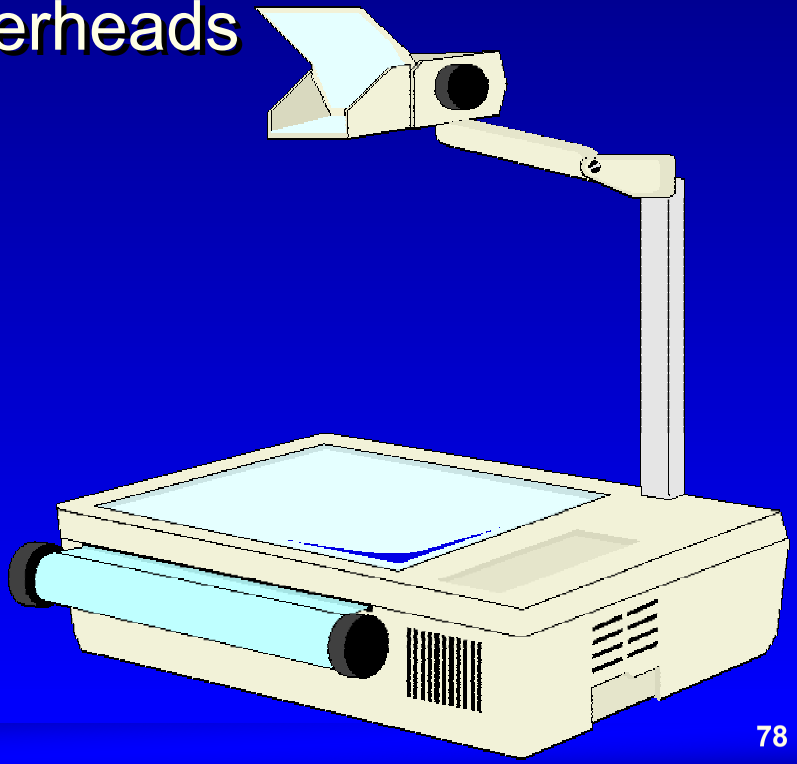

CHILLED WATER PIPING CAPACITY

TONS (1000 ft²)	Capacity Area

BURIED PIPE		WATER SIDE TEMPERATURE RISE, Δ T GPM/TON						
Pipe Diameter (in)	GPM Vel HP Ft/100ft Cost	10°F 2.4	12°F 2.06	14°F 1.7	16°F 1.5	18°F 1.33	20°F 1.2	24°F 1.0
48	60,000 GPM 10.6 FPS 0.8'/100' 400 HP $1400/ft	25,000 (7,500)	30,000 (9,000)	35,000 (10,500)	40,000 (12,000)	45,000 (13,500)	50,000 (15,000)	60,000 (18,000)
42	40,000 GPM 9.2 FPS 0.8'/100' 200 HP $1200/ft	16,000 (4,800)	20,000 (6,000)	24,000 (7,200)	27,000 (8,000)	30,000 (9,000)	34,000 (10,000)	40,000 (12,000)
36	30,000 GPM 9.4 FPS 1.0'/100' 200 HP $1000/ft	12,500 (3,800)	15,000 (4,500)	17,500 (5,300)	20,000 (6,000)	22,500 (6,800)	25,000 (7,500)	30,000 (9,000)
30	20,000 GPM 9.1 FPS 1.1'/100' 150 HP $800/ft	8,000 (2,400)	10,000 (3,000)	12,000 (3,600)	13,000 (4,000)	15,000 (4,500)	17,000 (5,000)	20,000 (6,000)
24	12,000 GPM 8.5 FPS 1.3'/100' 120 HP $700/ft	5,000 (1,500)	6,000 (1,800)	7,000 (2,100)	8,000 (2,400)	9,000 (2,700)	10,000 (3,000)	12,000 (3,600)
18	7,000 GPM 9.5 FPS 2.0'/100' 100 HP $600/ft	3,000 (900)	3,500 (1,050)	4,000 (1,200)	4,600 (1,400)	5,200 (1,600)	6,000 (1,800)	7,000 (2,100)
16	5,000 GPM 9.0 FPS 2.8'/100' 100 HP $500/ft	2,000 (600)	2,500 750	3,000 (900)	3,500 (1,050)	3,800 (1,100)	4,000 (1,200)	5,000 (1,500)
14	4,000 GPM 9.5 FPS 3.0'/100' 100 HP $400/ft	1,700 (500)	2,000 (600)	2,400 (720)	2,700 (800)	3,000 (900)	3,400 (1,000)	4,000 (1,200)
12	3,000 GPM 8.7 FPS 3.8'/100' 75 HP $350/ft	1,250 (380)	1,500 (450)	1,800 (540)	2,000 (600)	2,300 (680)	2,500 (750)	3,000 (900)
10	2,000 GPM 8.0 FPS 3.1'/100' 40 HP $300/ft	800 (240)	1,000 (300)	1,200 (360)	1,300 (400)	1,500 (450)	1,700 (500)	2,000 (600)
8	1,200 GPM 7.7 FPS 4.0.'/100' 35 HP $250/ft	500 (150)	600 (180)	700 (200)	800 (240)	900 (270)	1,000 (300)	1,200 (360)
6	600 GPM 6.7 FPS 4.0'/100' 20 HP $200/ft	250 (75)	300 (90)	350 (100)	400 (120)	450 (140)	500 (150)	600 (180)
4	200 GPM 5.0 FPS 4.0'/100' 5 HP $150/ft	80 (24)	100 (30)	120 (36)	130 (40)	150 (45)	170 (50)	200 (60)

GPM's were selected to maintain water velocities (V) below 10 fps, and pressure drop (f) below 1'/100' for large size pipes. The GPM values for smaller size pipes were selected to maintain water velocities below 7 fps, and pressure drop below 4'/100'. The velocities and friction drop values are according to Cameron. (C=100).

1000's of gross sq. ft. of building are figured at 300 GSF/ton, I.e. (10,500) indicates that approximately 10,500,000 GSF can be air-conditioned with 35,000 tons. For heavy research areas use 220 GSF/ton.

HP values to pump the water through 1000' return calculated using:

$$HP = \frac{GPM \times TDH}{3940 \times 7.5} \qquad TDH = \frac{2000}{100} \times f$$

STEAM SYSTEM PIPING CAPACITY

1000 lb/hr (1000 ft²) [HP]	Steam Quantity Area Feedwater Pump HP

BURIED PIPE		INITIAL PRESSURE (psig) Δ P/100 ft · TOTAL Δ P SATURATED TEMPERATURE (°F)						
Diameter (in) Stm/Cond	Cost	15 0.4 · 4 250	30 0.6 · 8 270	50 0.8 · 12 300	100 1.2 · 20 340	125 1.6 · 26 350	150 2 · 32 370	250 3 · 50 400
24"/ 10"	$850/LF	100 (1,500) [5]	200 (3,000) [510]	300 (4,500) [40]	600 (9,000) [150]	700 (10,000) [250]	1,000 (15,000) [400]	1,500 (22,000) [1,000]
20" / 8"	$700/LF	70 (1,000) [3]	150 (2,200) [15]	200 (3,000) [30]	400 (6,000) [100]	450 (6,800) [150]	700 (10,000) [250]	950 (14,000) [600]
18" / 8 "	$650/LF	50 (750) [2]	100 (1,500) [10]	150 (2,200) [20]	300 (4,500) [75]	350 (5,200) [120]	500 (6,800) [200]	700 (10,000) [500]
16" / 6"	$600/LF	40 (600) [1]	70 (1,000) [5]	100 (1,500) [15]	200 (3,000) [50]	250 (3,800) [100]	400 (6,000) [150]	550 (8,300) [400]
14" / 6"	$550/LF	25 (380) [1]	50 (750) [4]	80 (1,200) [10]	150 (2,200) [40]	170 (2,500) [75]	250 (3,800) [100]	350 (5,200) [300]
12" / 4"	$500/LF	20 (300) [1]	40 (600) [3]	60 (900) [10]	120 (1,800) [30]	150 (2,200) [50]	200 (3,000) [75]	300 (4,500) [200]
10" / 4"	$450/LF	15 (220) [1]	25 (380) [2]	40 (600) [5]	70 (1,000) [20]	80 (1,200) [25]	120 (2,000) [50]	200 (3,000) [150]
8" / 4"	$400/LF	7 (100) [1]	15 (220) [1]	20 (300) [2]	40 (600) [10]	50 (750) [20]	70 (1,000) [30]	100 (1,500) [75]
6" / 3"	$350/LF	4 (60) [1]	7 (100) [1]	10 (150) [1]	20 (300) [5]	25 (380) [7]	40 (600) [15]	50 (750) [50]
4" / 1.5"	$300/LF	1 (15) [1]	2 (30) [1]	4 (60) [1]	6 (90) [1]	7 (100) [2]	10 (150) [4]	15 (220) [10]

Building SQFT values are based on 60 Btuh/sqft peak average combined load (building heat and domestic hot water). For winter lows below +25 F: at 0 F multiply building SQFT by 0.8, at -20 F multiply building SQFT by 0.6.

Steam lines are sized to approximately 10,000 ft/min.

Condensate lines are sized to approximately yield pressure drops less than 2'/100'.

Prices shown are construction cost for a direct buried dual conduit piping system.

NATURAL GAS PIPING CAPACITY

1000 lb/hr (1000 ft²) [HP]	Steam Quantity Area Feedwater Pump HP

Buried Pipe		Inlet Pressure Δ P/100 ft			
Diameter (in)	Cost ($/LF)	5 psig inlet with 1 psig drop	10 psig inlet with 1½ psig drop	30 psig inlet with 5 psig drop	60 psig inlet with 10 psig drop
6	$50 / LF	100 (1,000)	140 (1,500)	350 (3,700)	650 (7,000)
4	$40 / LF	35 (350)	50 (520)	120 (1,300)	220 (2,300)
3	$36 / LF	15 (160)	25 (260)	60 (640)	100 (1,000)
2½	$32 / LF	10 (100)	13 (150)	35 (360)	35 (700)
2	$30 / LF	6 (60)	8 (85)	20 (200)	40 (400)
1½	$28 / LF	3 (30)	4 (40)	10 (100)	20 (200)
1	$26 / LF	1 (10)	1 (10)	4 (40)	7 (75)

Building SQFT values are based on 75 Btuh/ft2 peak average combined load (building Heat and domestic hot water), and 80% combustion efficiency. For winter lows below +15 F: at 0 F multiply building SQFT by 0.8, at -20 F multiply building SQFT by 0.6.

Numbers shown are calculated for a nominal 100ft run of pipe. The energy delivered to the system may be estimated at 1040 Btu/CF. Therefore, a capacity of 20,000 CF cor-responds to (20,000 CF)*(1040 Btu/CF), or 20,800,000 Btu.

The cost to provide a boiler or other heating equipment to a stand-alone (no steam) building is approximately $2-$4 per square foot of building area.

This chart is intended to be used for obtaining an initial estimate of reauired system sizes and cost. Actual system design must be based on values obtained specifically for the project. For total project cost add A-E fees, testin, escalation, contingencies, etc.

This chart is intended to be used for obtaining an initial estimate of reauired system sizes and cost. Actual system design must be based on values obtained specifically for the project. For total project cost add A-E fees, testin, escalation, contingencies, etc.

UNDERGROUN HIGH VOLTAGE DISTRIBUTION

MW
(1000 ft²)
[A]

Power
Area
Ampacity

Wire		Voltage, Phase	
Wire Size(sets)	Cost	5KV Range	15 KV Range
Four Loops 8@500 mcm	$450/LF	N/A	25 (8,300) [1,160]
Two Loops 4@500 mcm	$240/LF	N/A	12.5 (4,200) [580]
One Loop 2@500 mcm	$130/LF	2.4 (480) [375]	8 (2,700) [370]
One Loop 2@350 mcm	$120/LF	2.0 (400) [375]	6.7 (2,200) [310]
One Loop 2@250 mcm	$100/LF	1.7 (340) [260]	5.6 (1,800) [260]
Radial 500 mcm	$80/LF	2.4 (480) [375]	8 (1,600) [370]
Radial 350 mcm	$75/LF	2 (400) [315]	6.7 (1,340) [310]
Radial 250 mcm	$70/LF	1.7 (340) [260]	5.6 (1,120) [260]
Radial 4/0	$65/LF	1.5 (300) [235]	5.2 (1,040) [240]
Radial 2/0	$62/LF	1.2 (240) [185]	4 (800) [185]
Radial 1/0	$60/LF	1 (200) [160]	3.5 (700) [165]
Radial #1	$58/LF	0.9 (180) [140]	3.1 (620) [145]
Radial #2	$56/LF	0.8 (160) [125]	2.8 (560) [130]

Ampacities shown are from the National Elec-trical Code, and are for underground ductbank, concrete encased, minimum 3 ducts. Multiple loop ampacities are reduced per the National Electrical Code. Cable is single conductor, shielded, 100% insulation level high voltage cable. Each duct contains 3 h.v. cables and a ground conductor sized per NEC.

A manhole every 500 feet.

Power factor is assumed to be 0.9.

For radial systems, building area power usage is estimated at 5 W/ft².

For loop systems, building area power usage is estimated at 3 W/ft² (central plant loads not included).

Cost does not include high voltage switch at each point of use ($15,000 each).

This chart is intended to be used for obtaining an initial estimate of required system sizes and cost. Actual system design must be based on values obtained specifically for the project. For total project cost add A-E fees, testing, escalation, contingencies, etc.

Recap and Questions?